DELLNER

TRAIN CONNECTION SYSTEMS

www.dellner.com

DELLNER COUPLERS AB
VIKAVÄGEN 144
FALUN 79195
SWEDEN

01/2022

CONNECTING TODAY WITH TOMORROW
A FEW WORDS FROM OUR CEO

As the CEO of the Dellner Group, I am delighted to present our customers with the new brochure from the world's leading provider of Train Connection Systems.

Dellner strives to create products that help make train traffic around the world safer, more efficient, and increasingly sustainable. To this end, we are constantly expanding our portfolio of products and services for Train Connection Systems with new innovations, ensuring that our customers across the globe have the best possible solutions at their disposal. We know that our customers' success is our success.

In addition to quality and reliability, innovation is one of the most crucial means of supporting our customers. One of the most exciting innovation projects Dellner is involved in as a key player is Shift-2-Rail: an EU Green Deal project. Its goal is to convert almost 1 million freight couplers in Europe into digitally controlled automatic centre buffer couplers. Shift-2-Rail will raise the speed, efficiency, and sustainability of freight transport in Europe to a new level and serves to underline the importance of train transport for a CO2-neutral future.

Shift-2-Rail is not our only innovation project aimed at improving our environmental footprint. When developing our new gangways, we were able to halve maintenance intervals to minimise costs and downtime. What's more, the double-acting Dellner damper has the lowest weight in its class, helping to reduce weight and energy costs. System-independent maintenance monitoring has enabled us to improve train availability so that train operators can serve their customers more punctually and thus operate more reliably.

Dellner's reputation for being a global player yet still acting locally is demonstrated by the fact that we now have a network consisting of 22 subsidiaries on five different continents, with experienced service technicians and fully equipped local workshops. This enables us to carry out works within the shortest possible time.

Another milestone in the expansion of our global position is the completion of our new flagship production facility in Poland. Together with the new factories in India and the US, Dellner now has three production sites conforming to the highest industrial standards, in addition to the production sites in the UK, China, and our headquarters in Sweden. For our customers, this means increasingly cost-efficient products and more sustainable supply chain management with zero emissions as a target for the future.

As CEO of Dellner, my future goal is to continue our global growth strategy by focusing on innovation, minimising waste and costs, increasing quality and delivery performance, and making sure we live up to the reputation of providing excellent customer and after-market services.

I look forward to continuing this journey with our customers and suppliers, and would like to also thank the motivated and committed Dellner employees who have made our success, and our customers success, possible.

CEO & President
ANDERS LINDBERG

TABLE
OF CONTENTS

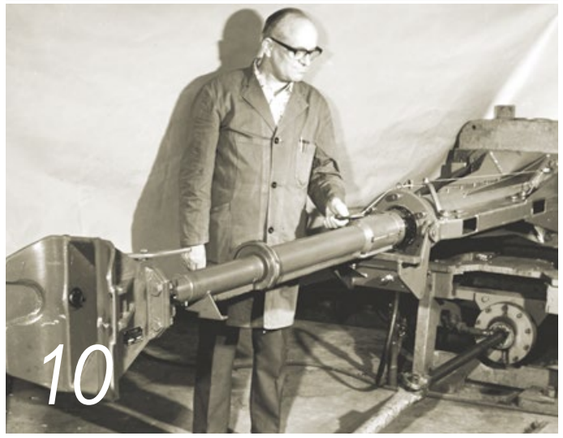

MEET **DELLNER**

Dellner is one of the world's leading suppliers of Train Connection Systems, with 81 years of experience in the rail industry. Based in Falun, Sweden, with 21 subsidiaries around the world and more than 1200 employees globally, Dellner continues with its steady, robust growth in couplers, gangways, front hatches, dampers and crash energy management, as well as the service segment of the rail industry.

Founded in 1941, we have years of tested, proven experience in producing safe and reliable train connections, and providing innovative, state-of-the-art and cutting-edge products for our customers.

Quality and prompt delivery will remain our number one focus along with our relationship with the car builders and operators in all regions. Strategic investments in the expansion of our existing product portfolio and new product areas like freight and digitalization will also get our full attention during the coming years, insuring our place as market leader.

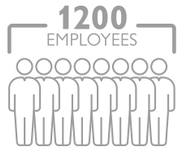

All our activities, objectives, values and our success are defined by our customers and are driven by our motivation to offer them the highest level of support and innovation.

TRAIN CONNECTION SYSTEMS

COUPLERS

GANGWAYS

DAMPERS

SERVICES

DELLNER
SITES OVERVIEW

OUR **HISTORY**

Dellner's story began in 1941 when Jan Dellner established a small production company in Northern Sweden, called Ingenieur-Buro Dellner, and began manufacturing couplers for the domestic market. His first customer was SJ (Swedish State Railway), which asked him to produce its first automatic couplers.

Seven years later, Ingenieur-Buro Dellner won an order for 360 couplers for the Warsaw Metro – Poland's only rapid transit system.

After 1952, Ingenieur-Buro Dellner was renamed several times:

- RUNNVIKAMECHANISCHEWERKSTATT
- JAN DELLNER U. CO.
- AB DELLNER MALMCO
- DELLNER COUPLERS AB

Until 1960, Dellner supplied automatic couplers to numerous customers in Europe, such as Paris Metro, SNCF, Rome Metro, and FS (Italian State Railway).

The company has now grown to become a major global player in Train Connection Systems and serves customers all over the world.

Dellner's focus has always been on innovative research and design. By doing so, we've been responsible for several global breakthroughs in the rail industry.

In 1984, Dellner was the first manufacturer to launch the gas hydraulic damper in couplers. This was followed in the 1990s by the production of snow gaiters and front hatch mechanisms.

More recently, the company's focus has been on new products from front to intermediate train systems.

One of our biggest milestones was the acquisition of the Woodville factory, which enabled us to produce gangways in-house. This acquisition meant Dellner became the world's leading system integrator for the interface between rail cars and train front ends.

In 2019, Dellner has reached another milestone in its railway journey as together with Dellner Components and Dellner Dampers was acquired by the Private Equity company - EQT. Supported by the famous Wallenberg family, EQT was founded in 1994 in Sweden and now operates from 15 countries across Europe, Asia and North America. It invests in companies with a mission to develop their strengths and support them in sustainable growth. For Dellner, it is a new chapter which will even enhance its technical, operational, commercial and legal structures.

In 2021 Dellner aquired Miira, the coupler production of CAF. With that take over Dellner gained market share with new customers and markets, access to new suppliers and a large installed base of couplers and gangways. As the industry leader in supplying full Train Connection Systems, Dellner will continue delivering cutting edge and high-quality products as well as the best service to its customers worldwide.

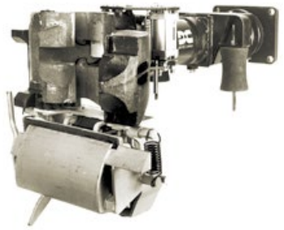

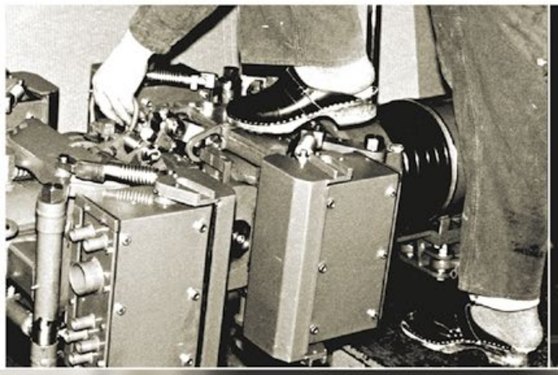

We were the first manufacturer to launch the gas hydraulic damper in couplers

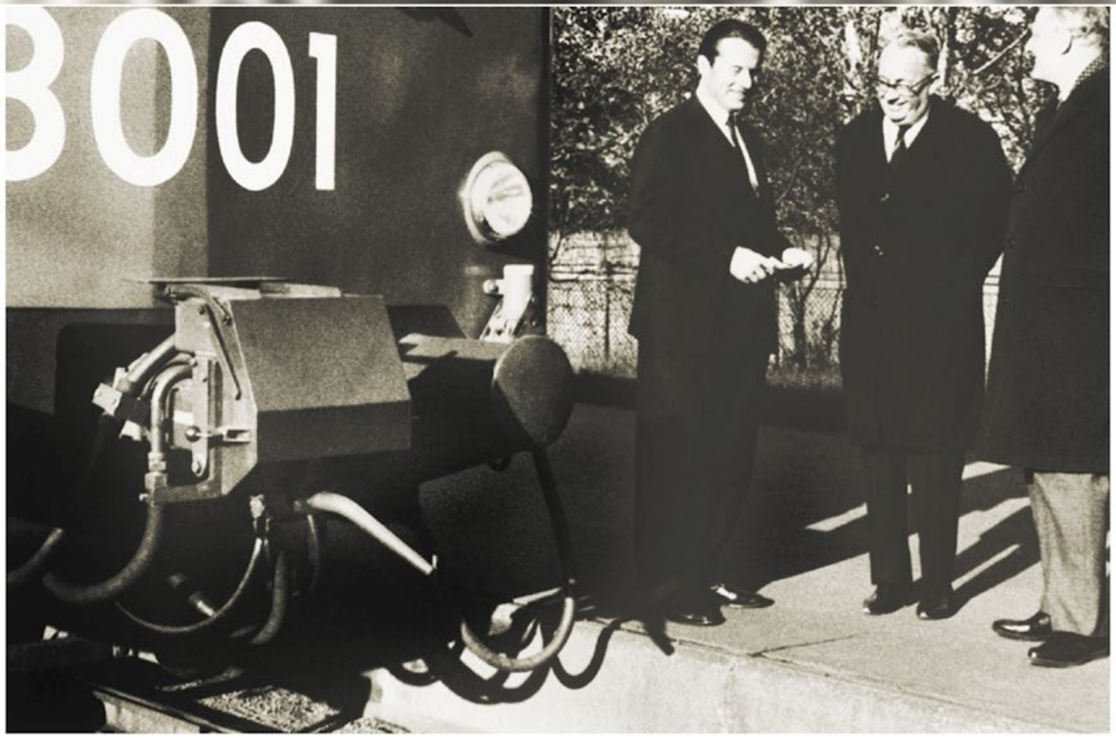

MISSION
VISION AND VALUES

MISSION

Dellner provides Train Connection Systems with innovative and sustainable concept and excellent global services, which makes travel safer and more reliable.

VISION

To be the number one global supplier of safe and high quality Train Connection Systems and Services, supporting the most environmentally friendly way of travelling.

"It is a pleasure to observe how Dellner extends and explores markets. At each trade fair there are more and more customers at our booths who appreciate our work and the quality of our products. Our external communication is always focused on our customers, who are at the centre of our all activities."

Izabela Drozdz, Global Marketing and Social Media Manager, DELLNER POLAND

RESPECT | JOY | ACTION | TEAM

RESPECT

We do business with integrity and in an ethical manner. We respect future generations and work continuously to minimize impacts on the environment.

ACTION

We are energetic, we get things done efficiently while achieving high quality. We have a constant drive to improve our performance and learn from our experiences.

JOY

We celebrate success, we are proud to contribute to our society and support our customers.

TEAM

We are stronger as a team and we benefit from our differences. We create a working environment free from discrimination and support each other to develop as individuals and as a group.

"Designing the systems which connect trains is a huge responsibility for the designers.
I am very proud of the fact that the couplers that I have helped design are in service all over the world.
I never know when, on holiday, I will travel on a train with "my" products…"

Bente Rost, Team Manager Center Section, DELLNER SWEDEN

FRONT-END SYSTEMS

- AUTOMATIC COUPLERS AND MODULAR CONCEPT
- ADAPTERS
- COUPLER PROTECTION PRODUCTS
- DATA TRANSMISSION PRODUCTS
- CRASH ENERGY MANAGEMENT

FRONT-END SYSTEMS

Applications:
- Commuters
- Metro
- HST
- LRV
- People Movers

AUTOMATIC COUPLERS

Automatic couplers enable railway vehicles to connect instantly, without human intervention. Our multi-function couplers can provide safe and reliable mechanical, pneumatic connections as well as electrical connections between vehicles. They also optimise energy absorption, giving the maximum protection for the vehicle and its passengers.

We offer many different coupler types, to suit the required forces and technical demands of each application. Thanks to a comprehensive range of coupler heads – including latch type, SA3, Tightlock and Georg-Fischer – Dellner couplers are compatible with almost every other brand of coupler used in the world today.

COUPLER HEAD TYPE 10

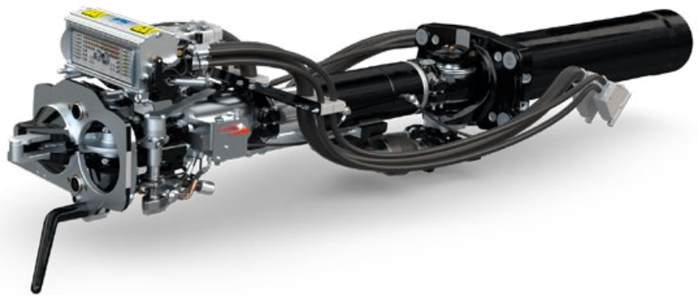

COUPLER HEAD TYPE 30

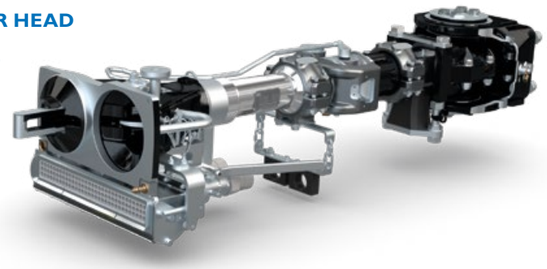

COUPLER HEAD TYPE 35

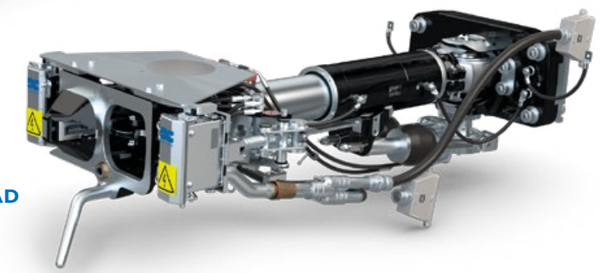

COUPLER HEAD TYPE SA3

COUPLER HEAD TYPE 12

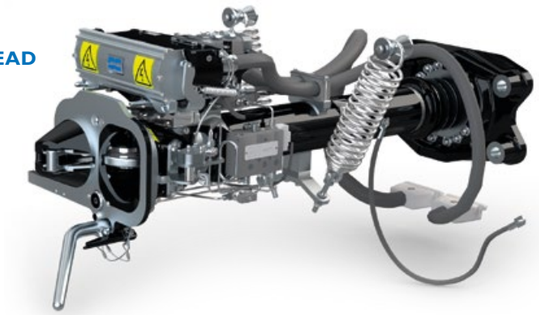

COUPLER HEAD TIGHTLOCK TYPE

COUPLER HEAD TYPE GEORG-FISCHER

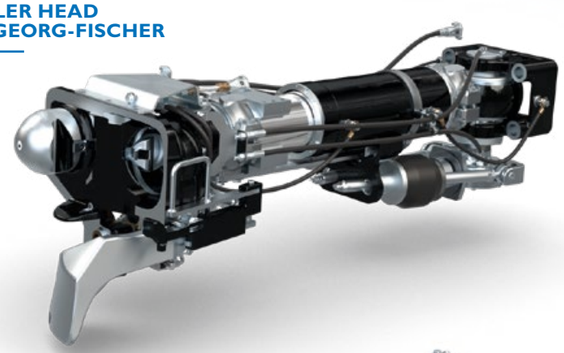

COUPLER HEAD TYPE 330

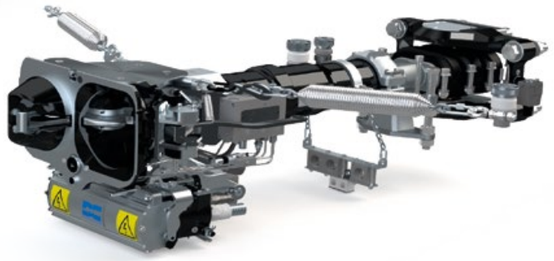

Applications:
- Commuters
- Metro
- HST
- LRV
- People Movers

MODULAR CONCEPT OF AUTOMATIC COUPLERS

Dellner's modular couplers add flexibility and functionality – and give operators better spare part availability, and lower maintenance costs. The modular approach also means we can offer shorter lead-times, arranging delivery as soon as the order is placed, and accelerating our customers' own production. Importantly, the products are a proven, solid solution – demonstrating their worth daily on hundreds of trains worldwide.

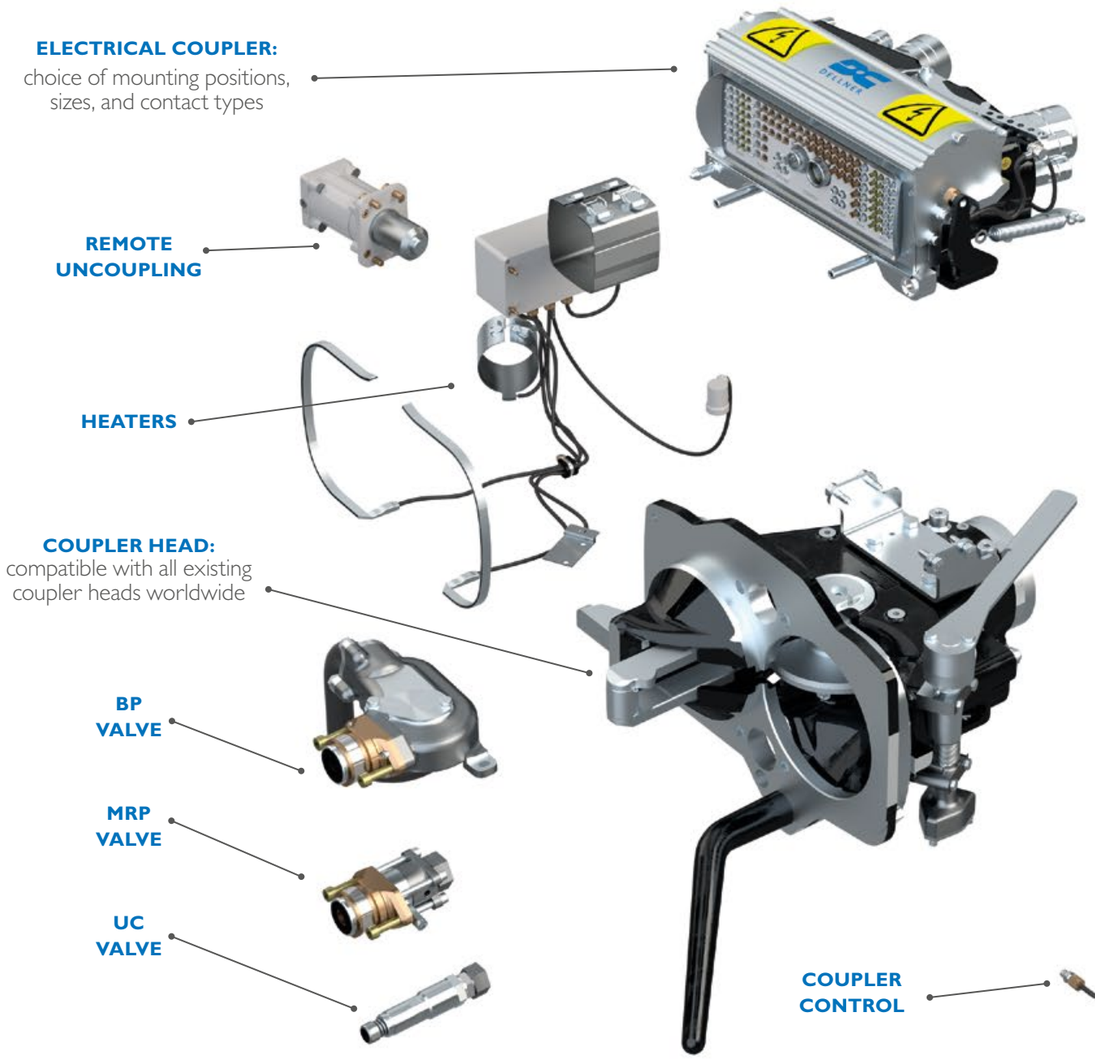

Applications:
- Commuters
- Metro
- HST
- LRV
- People Movers

ADAPTERS

Adapters provide safe and reliable connections in unforeseen and emergency situations. At Dellner, we offer adapters compatible with every coupler in the world – making it easy for our customers to satisfy weight and force level requirements. We also offer a choice of both MRP and BP pneumatic connections.

TYPE 10

TYPE 10
WITH AIR HOSES

TYPE 330

TYPE 12

BSI TYPE

BUCKEYE TYPE

DRAWNHOOK

Applications:
- Commuters
- HST
- People Movers

COUPLER PROTECTION PRODUCTS

We offer a wide range of solutions which protect couplers from snow, ice, dust, and sand. They not only safeguard coupler functionality – even in severe weather conditions – but also increase component lifespan.

Each train line faces different environmental conditions. We can create bespoke solutions to ensure a safe, cost effective and reliable service for every train in your fleet.

PROTECTION GAITER

COUPLER HEATER
INSULATION SHROUD

COUPLER SHAFT
PROTECTION BELLOW

PROTECTION GAITER

Applications:
- Commuters
- Metro
- HST
- LRV
- People Movers

DATA TRANSMISSION PRODUCTS

Dellner supports the transmission of every kind of digital signal throughout the train: from onboard internet, video, infotainment and passenger counting to communication links for train safety.

CHOICE OF CONTACTS

Our electrical couplers provide different types of contacts for transferring analogue signals, power, and Ethernet up to 1 Gb/s. It's excellent if you need to introduce high-speed data transmission in new vehicles or upgrades of existing rolling stock.

DEX500

Dellner Ethernet ConneXion (DEX500) modems are a cost-effective way to transmit network data across the couplers, using existing low-frequency or UIC train lines. They work without replacing old contacts; even oxidised or dirty couplings will not disrupt transmission.

Applications:
- Commuters
- Metro
- HST
- LRV
- People Movers

CRASH ENERGY MANAGEMENT

Crash Energy Management is a vital part of Dellner's Train Connection Systems. We design our products to ensure passenger safety and train availability at all times.

Our Crash Energy Management components are located in the front of a train and between the cars. They help to handle the impacts of everyday train operations. In serious collisions they absorb energy from impact forces and stop carriages from twisting and climbing – potentially saving passengers' lives. Dellner Train Connection Systems are therefore a key part of any comprehensive train safety management system.

We have developed our own software where we can simulate coupling, towing, snatch and crash scenarios according to standards or general requirements. This enables us to find the most cost-effective solutions to keep forces and accelerations at acceptable levels – saving lives and preventing damage to the structure of the train.

- Crash Energy Management is essential to meet relevant standards, such as EN 15227, and to enable high-speed coupling performance.
- The effect of a collision on a train depends on the behaviour of the energy absorbers built into the couplers.
- Whatever the impact conditions, the couplers should not bottom out, otherwise high deceleration will occur.
- Energy should be absorbed along the train, controlling impact forces between carriages, to reduce acceleration and deceleration at each point.

FOUR STAGE PERFORMANCE OF CEM'S ELEMENTS

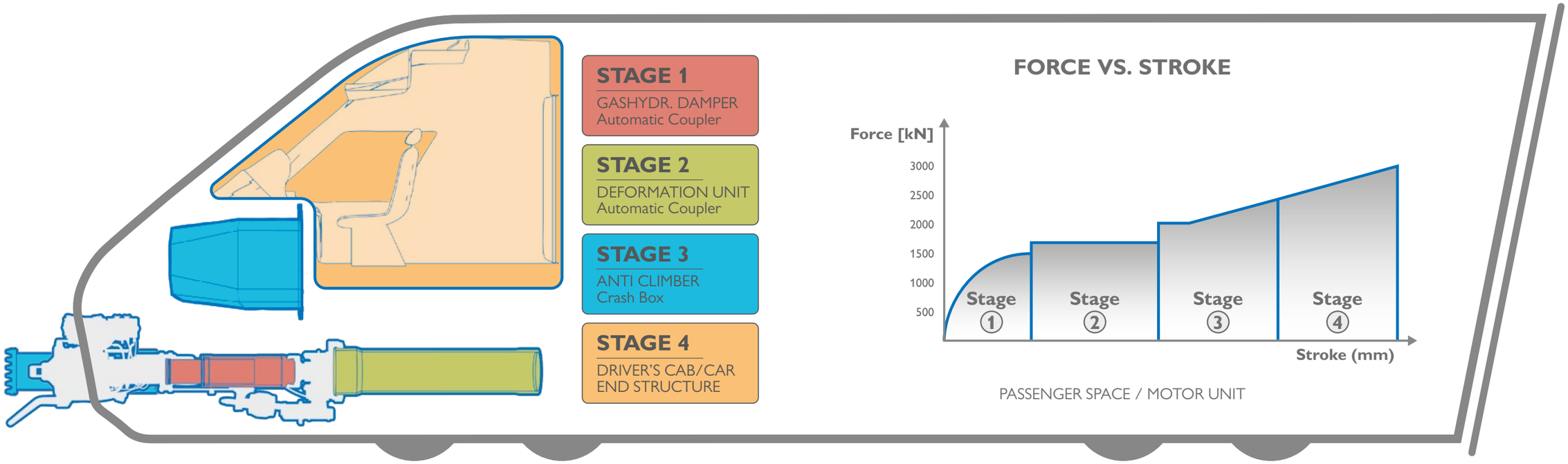

GAS-HYDRAULIC BUFFERS AND VISCO-ELASTIC BUFFERS

Gas-hydraulic buffers offer the best regenerative energy absorption at coupling and collision speeds. The buffer's characteristics can be adjusted so deceleration is always kept to a minimum.

Capacity

- STROKE: 50-370 mm
- FORCE: 200-400/900/1500 kN

Features

- FULLY REVERSIBLE ENERGY ABSORPTION UP TO INTERMEDIATE SPEEDS
- VELOCITY SENSITIVE
- KEEPS DECELERATION TO A MINIMUM
- UP TO 90% EFFICIENCY

FRICTION SPRING DAMPER

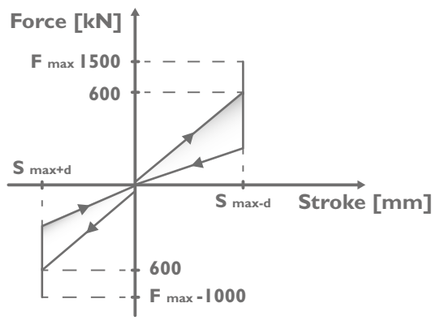

GAS-HYDRAULIC & FRICTION SPRING DAMPER

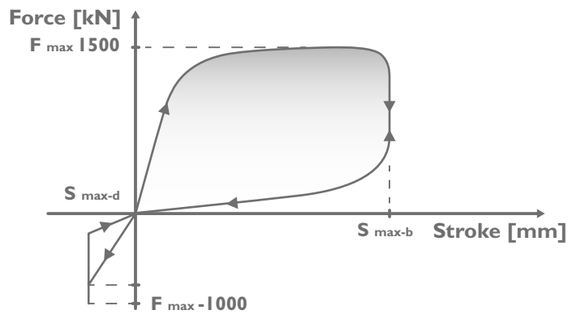

SINGLE ACTING DAMPER

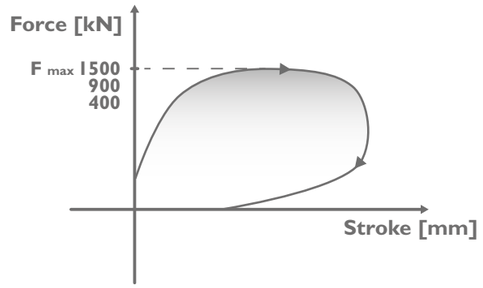

DOUBLE ACTING DAMPER

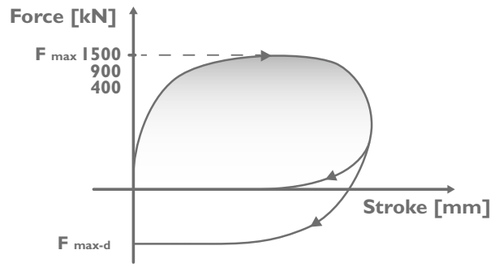

FRONT-END SYSTEMS / CRASH ENERGY MANAGEMENT / Gas-hydraulic buffers and visco-elastic buffers

POLYMER SPRING BEARINGS

Polymer Spring Bearings are a reliable and easy-to-maintain way to absorb energy reversibly.

Capacity

- STROKE: 7-55 mm
- FORCE: UP TO 1500 kN

Features

- FULLY-REVERSIBLE ENERGY ABSORPTION UP TO MODERATE SPEEDS
- VELOCITY SENSITIVE
- KEEPS DECELERATION TO A MINIMUM
- UP TO 70% EFFICIENCY

SPHERICAL RUBBER BEARING

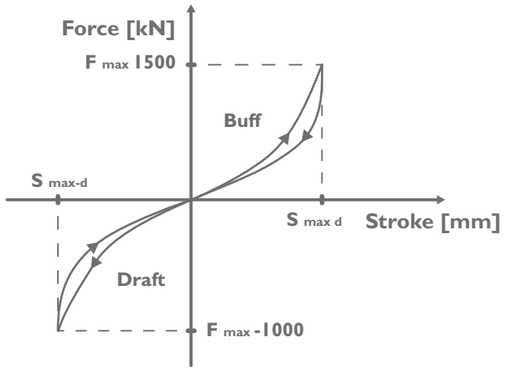

FRONT-MOUNTED

BACK-MOUNTED

WITH INTERNAL RELEASE

WITH DEFORMATION TUBE BEHIND

EFG 2

STANDARD POLYMER SPRINGS

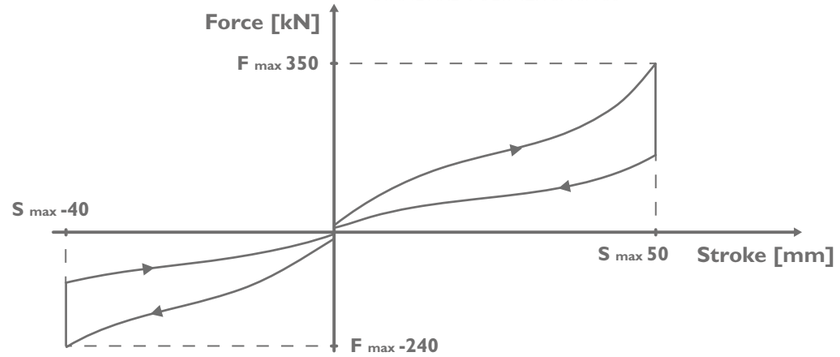

STRONG POLYMER SPRINGS

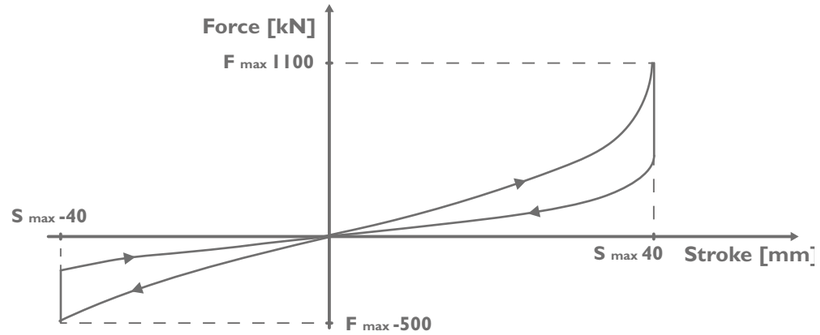

FRONT-MOUNTED

BACK-MOUNTED

EFG 3

STANDARD POLYMER SPRINGS

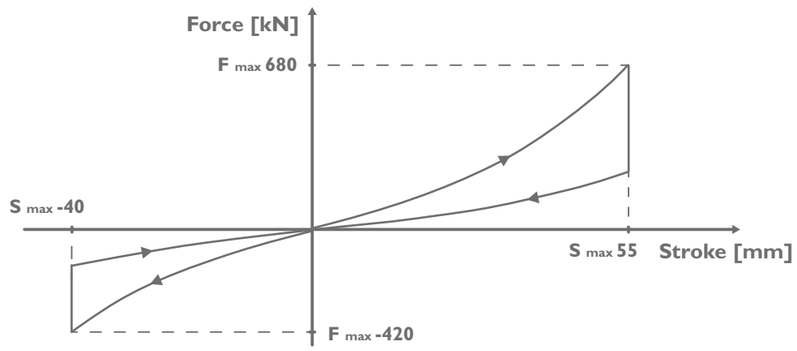

STRONG POLYMER SPRINGS

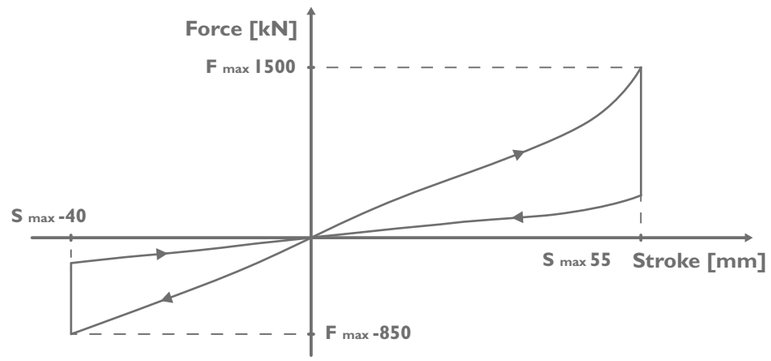

FRONT-MOUNTED

WITH INTERNAL RELEASE

BACK-MOUNTED

POLYMER RING BEARING

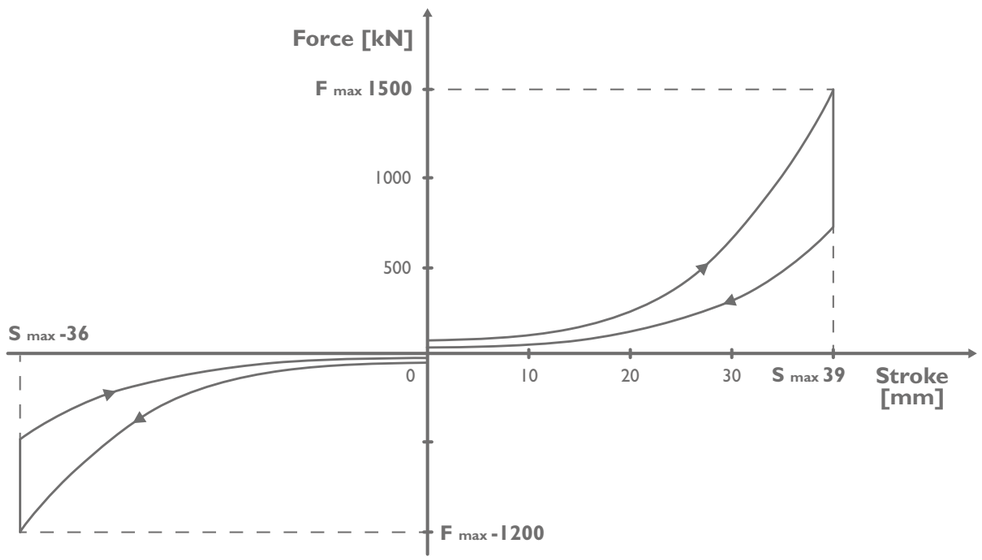

FRONT-MOUNTED

BACK-MOUNTED

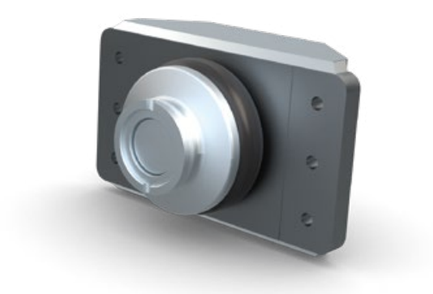

FRONT-END SYSTEMS / CRASH ENERGY MANAGEMENT / Polymer Spring Bearings

DEFORMATION ELEMENTS

Deformation Elements are a highly robust and efficient energy absorption component. The energy is absorbed by expanding (or collapsing) a tube over a mandrel, creating a very repeatable structural plastic deformation that, together with the friction, determines the deformation force. The correlation between static and dynamic tests concludes that deformation tubes are non-velocity dependent.

Capacity

- STROKE: 50-1200 mm
- FORCE: 200-2500 kN

Features

- NON-REVERSIBLE ENERGY ABSORPTION (MUST BE REPLACED AFTER USE)
- NON-VELOCITY SENSITIVE
- 100% EFFICIENCY

DEFORMATION TUBE
IN CENTER SECTION

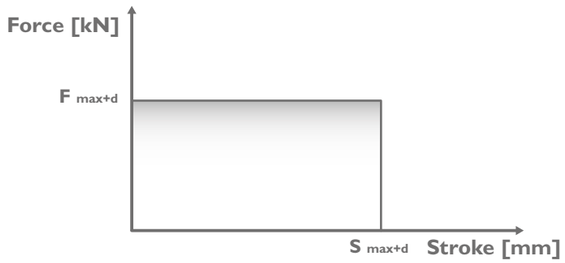

DEFORMATION TUBE
BEHIND PIVOT ANCHOR

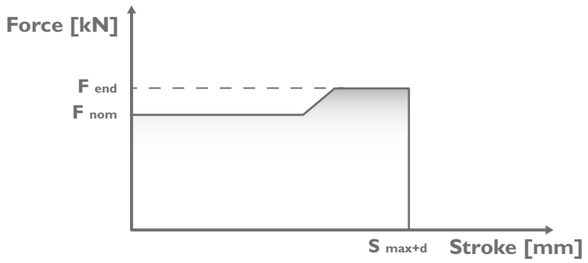

EXTRUSION BOLT

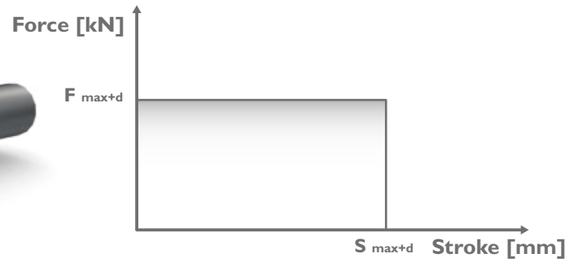

CRASH BOXES

Crash boxes offer a very high energy absorption capacity. They work parallel to the coupler and are typically combined with anti-climbers for optimal structural collapse, because they are not designed to transfer high vertical and lateral loads.

Capacity

- STROKE: 50-1000 mm
- FORCE: 200-3000 kN

Features

- NON-REVERSIBLE ENERGY ABSORPTION (MUST BE REPLACED AFTER USE)
- NON-VELOCITY SENSITIVE
- CLOSE TO 100% EFFICIENCY
- ABSORBS RESIDUAL IMPACT AFTER INITIAL COLLISION
- SHAPE CAN VARY TO FIT THE SPACE AVAILABLE
- RELEASE/SHEAR BOLTS ENSURE THE COUPLER RELEASES IN A CONTROLLED MANNER AND PUSHES THROUGH THE TRAIN POCKET WITHOUT INTERFERING WITH CRASH BOXES OR THE STRUCTURE OF THE CAB

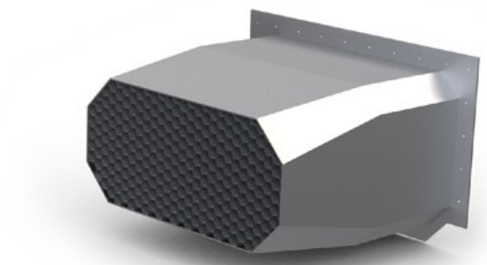

OVERRIDE PROTECTION

Override protection components must be able to withstand high bending moments created by vertical offset loading, to keep the train on the track. They can work parallel to the coupler, and will typically engage only after its deformation tube stroke and coupler release have been fully used. A stabilising function can also be built into the draft gear.

Capacity

- STROKE: 50-750 mm
- FORCE: 200-2500 kN

Features

- CHOICE OF REVERSIBLE, NON-REVERSIBLE, AND COMBINED ENERGY ABSORPTION
- NON-VELOCITY SENSITIVE (NON-REVERSIBLE ABSORBERS) OR VELOCITY SENSITIVE (REVERSIBLE ABSORBERS/ COMBINED)
- 70-100% EFFICIENCY

STG – STABILISING FUNCTION IN THE DRAFT GEAR: REVERSIBLE ENERGY ABSORPTION

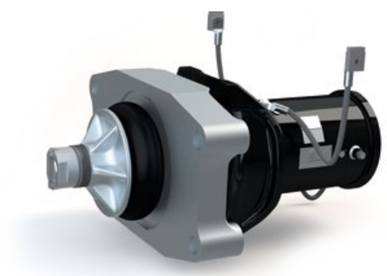

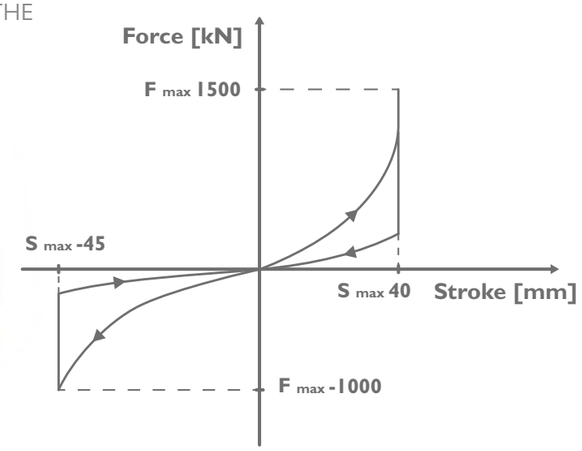

COMBINED ABSORBER: A REVERSIBLE GAS-HYDRAULIC BUFFER IN SERIES WITH A DEFORMATION TUBE

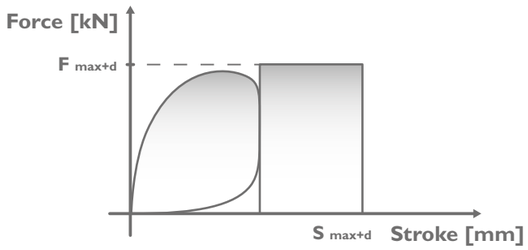

NON-REVERSIBLE ABSORBERS

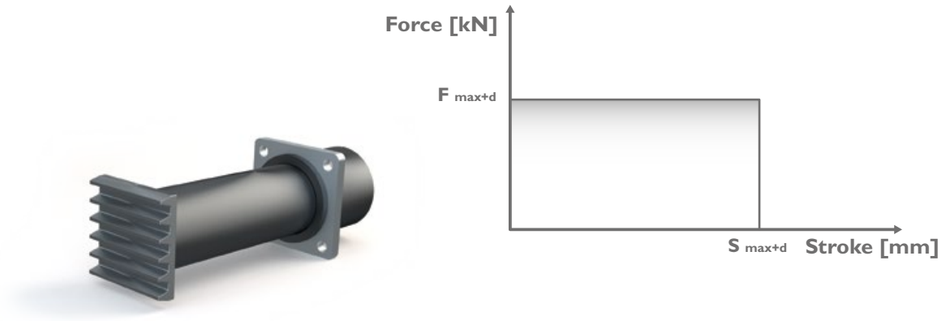

COMBINED ABSORBERS ASSEMBLED WITH FRONT BUMPER (FOR LRV 250 kN – 400 kN)

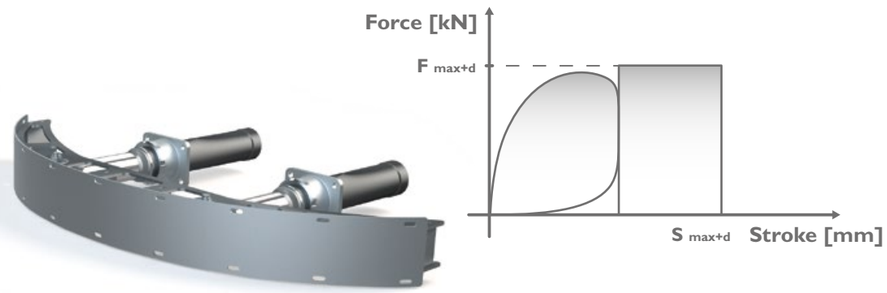

"Every process, component and product at Dellner is produced with maximum attention to detail. We are all travelers and we know that the quality of Train Connection Systems is important in order to make travelling safe and reliable for everybody."
Andrzej Richert, Production Manager, DELLNER POLAND

INTERMEDIATE SYSTEMS

SEMI-PERMANENT COUPLERS AND MODULAR CONCEPT

GANGWAYS

ARTICULATION JOINTS

INTERMEDIATE SYSTEMS

Applications:
- Commuters
- Metro
- HST
- LRV
- People Movers

SEMI-PERMANENT COUPLERS

Semi-permanent couplers provide manual coupling between multiple units. They ensure safe and rigid connections between units, and are a cost-effective option for rolling stock that are rarely separated. Our semi-permanent couplers can include electrical and pneumatic connections. They are available with gangway support and impact absorbing elements to maximise safety during a collision.

MODULAR CONCEPT

Like our automatic couplers, Dellner semi-permanent couplers are designed around a modular approach. This makes them extremely flexible with more than 500 different options. It also ensures high availability of spare parts, short lead-times and lower maintenance costs.

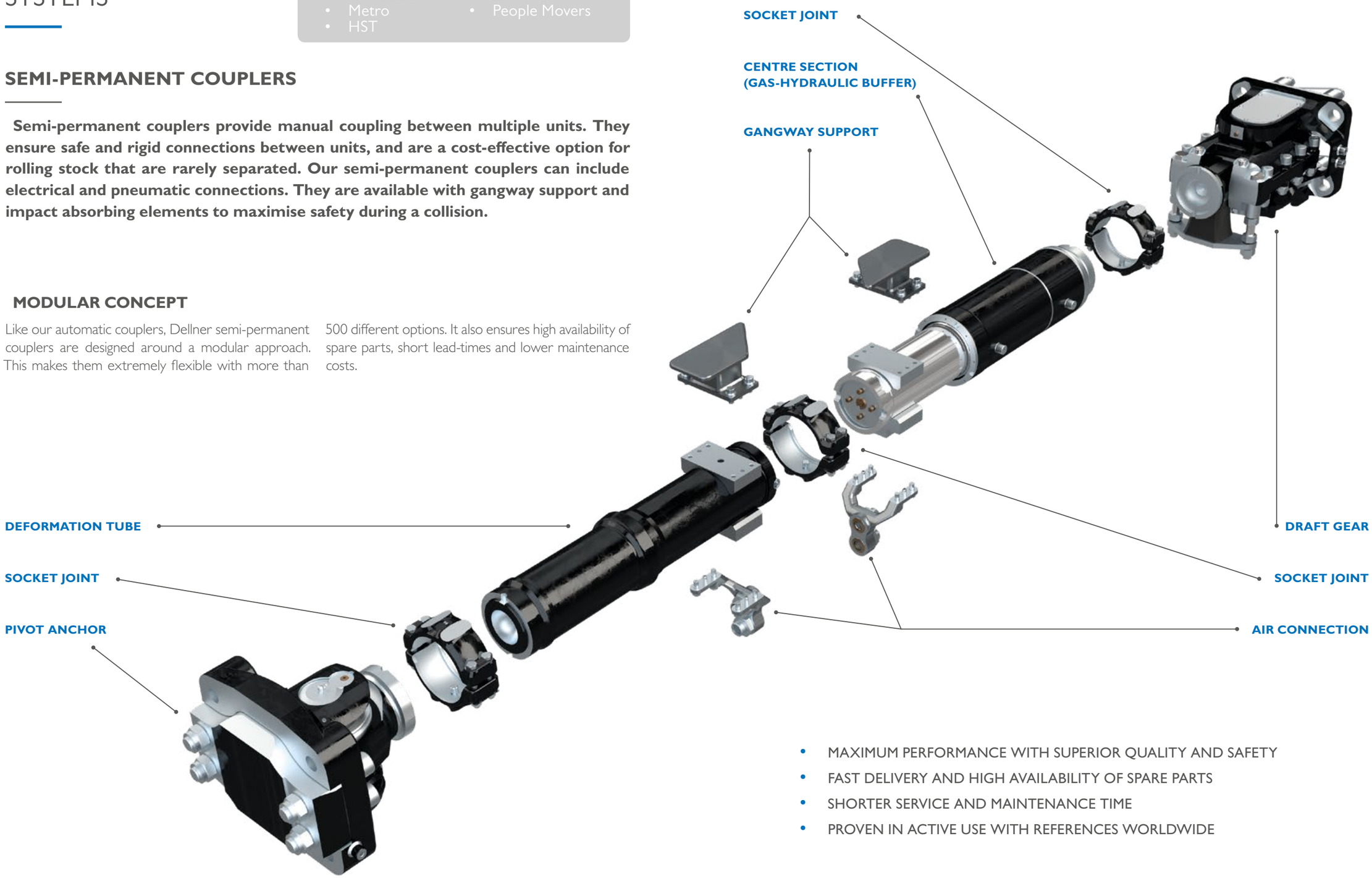

- MAXIMUM PERFORMANCE WITH SUPERIOR QUALITY AND SAFETY
- FAST DELIVERY AND HIGH AVAILABILITY OF SPARE PARTS
- SHORTER SERVICE AND MAINTENANCE TIME
- PROVEN IN ACTIVE USE WITH REFERENCES WORLDWIDE

Applications:
- Commuters
- Metro
- HST
- LRV
- People Movers

GANGWAYS

Our fully-synchronised intermediate systems can include a large variety of gangways, suitable for all applications. These are made from an exclusive, in-house silicone material which delivers enhanced durability, better fire resistance, and high noise attenuation.

We customise our gangways to suit your needs – meeting even the most demanding requirements, such as bespoke shapes and sizes, special colours and materials, unusual applications and operating environments, high tensile strength, and vandal-resistant implants.

Naturally, Dellner gangways are compliant with all significant international standards, and guarantee low maintenance costs for a low total cost of ownership.

COMPLIANT WITH FIRE AND SMOKE PERFORMANCE STANDARD EN 45545-2

MAXIMUM NOISE ATTENUATION >40 DB ACC.ISO15186-2

MAINTENANCE CYCLE 15 YEARS

INTERMEDIATE SYSTEMS / GANGWAYS

Applications:
- Commuters
- HST

ARTICULATION JOINTS

In articulated trains, the cars of a trainset share bogies with the adjoining cars. Two common configurations are a Jacobs's bogie, in which a common bogie is shared between both cars in an interface, or a semi-trailer joint where the common bogie is placed under only one of the cars.

FIGURE 1. JACOB'S BOGIE AND SEMI-TRAILER JOINT.

The use of the articulation joint offers several benefits:

- THE TRAINSET CAN PASS FASTER THROUGH CURVES SINCE SHARED BOGIES REDUCE THE LATERAL STRESS ON THE ROADBED
- THE OVERALL WEIGHT OF THE TRAINSET IS REDUCED AS THE NUMBER OF BOGIES IS CUT, IMPROVING THE PERFORMANCE OF THE TRAIN WHILE MINIMIZING WEAR ON THE TRACK
- SINCE THE CARS SHARE THE BOGIE, THE TRAIN MOVES TOGETHER AS A UNIT, EFFECTIVELY IMPROVING PASSENGER COMFORT
- IT CAN ALSO BE WIDER THAN CONVENTIONAL TRAINS AND STILL USE THE SAME TRACK AND TUNNEL PROFILE ALLOWING FOR WIDER AISLES AND SEATS AND IMPROVING PASSENGER COMFORT

Our newly developed articulation joint uses a Dellner patented Crash Energy Management product called Cold Drawn Bars (CDB). The CDB system improves a conventional energy absorbing articulating joint by:

- BEING MORE COMPACT - SINCE A CIRCULAR INTERFACE IS NOT NEEDED (TO ACCOMMODATE A DEFORMATION TUBE) THE ARTICULATING JOINT CAN BE MADE SMALLER
- BEING LIGHTER AND SAFER - UNLIKE THE DEFORMATION TUBE DESIGNS, THE CDB SOLUTION CAN BE SUBJECTED TO DRAFT LOADING AFTER A COLLISION WITHOUT NEEDING ADDITIONAL LOCKING MECHANISMS
- BEING MORE RELIABLE THROUGH SIMPLIFIED DESIGN – WITHOUT THE NEED OF A CIRCULAR INTERFACE, THE COUPLER SHANKS CAN BE SQUARE MAKING IT POSSIBLE TO EFFECTIVELY STEER THE SHANKS DURING THE STROKE OF THE CDB SYSTEM. THANKS TO THIS, NO EXTRA DESIGN FEATURES (E.G., ROTATIONAL STOP OR GUIDE RAIL) ARE NEEDED

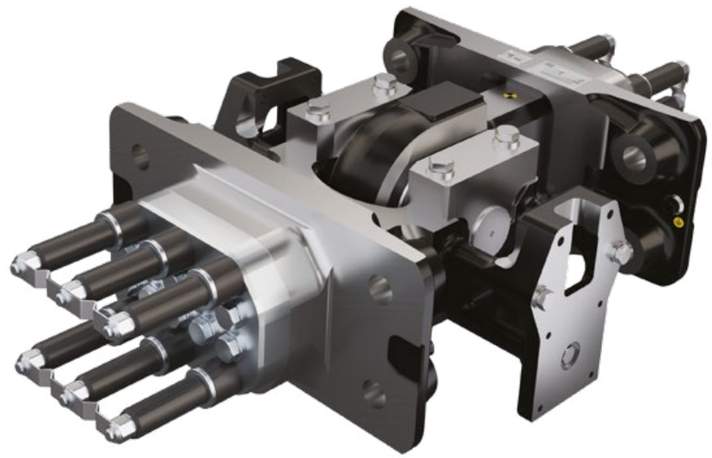

The articulation joint is also available as a stiff joint with no energy absorption.

DIGITAL AUTOMATIC COUPLERS (DAC)

Dellner is one of a select group of suppliers providing Digital Automatic Couplers (DAC) for further integration into the freight rail industry.

In September 2021 the latch type coupler was selected as the basis for future Digital Automatic Couplers (DAC) for the freight industry.

DAC is not a stand-alone technology but the backbone for "full digital freight train operations" to achieve an ambitious transformation in European rail freight. Use cases show that DAC couplers will enable the rail freight industry to become more competitive by shortening turnaround times, improving the freight trains total carrying capacity and increased rail freight reliability. The DAC will enable the implementation of train integrity systems and better breaking capacity, which will enhance traffic planning and rail accessibility. DAC will remove the need to enter the Bern rectangle and the necessity to conduct repetitive manual operations during shunting and assembly operations, thus improving rail worker health and safety. The Shift2Rail program predicts that approximately one million Digital Automatic Couplers will replace screw type couplers on new and existing freight wagons and locomotives between 2026–2030. This will be a major contributor to the Green Deal with an estimated reduction of 25 million CO2 emission equivalent by 2050.

As part of the Shift2Rail program, our couplers are extensively tested and validated in accordance with the requirements defined in the European DAC Delivery Program. Dellner has committed to participate in the next phase of the DAC implementation program.

Dellner's DAC coupler design is illustrated in the diagram below. The major sub-assemblies are the coupler head, draft gear and electric coupler. Options for added functionality include the addition of pneumatic valves, remote uncoupling, sensors, data control and customisation of the electric coupler.

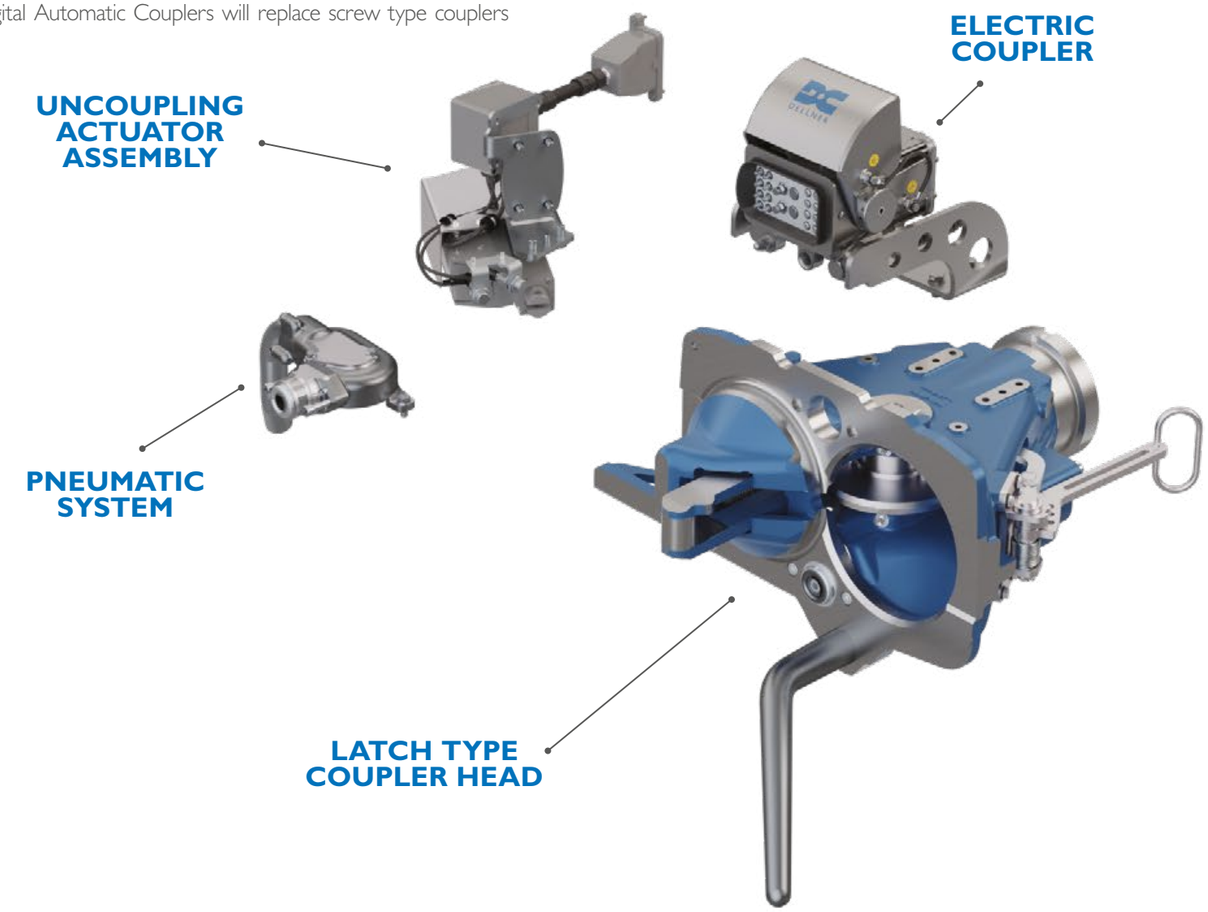

Features of the draft gear:

- BALANCED DRAFT GEAR
- ELASTOMER SPRINGS
- MECHANICAL STROKE INDICATORS
- LUBRIFICATION "FREE"
- FITS STANDARD UIC 530-1 COUPLER POCKET
- ANGULAR MOVEMENTS
  - HORIZONTAL ±15°
  - VERTICAL ±11°

Features of the coupler head:

- LATCH TYPE COUPLER – TYPE DELLNER DAC
- DRAFT/BUFF 1000/2000 KN
- ROBUST & PROVEN SERVICE
- LARGE GATHERING RANGE
  - VERTICAL +/-140 MM
  - HORIZONTAL -275 / +370 MM
- GREASING WITHOUT UNCOUPLING
- SOCKET JOINT INTERFACE

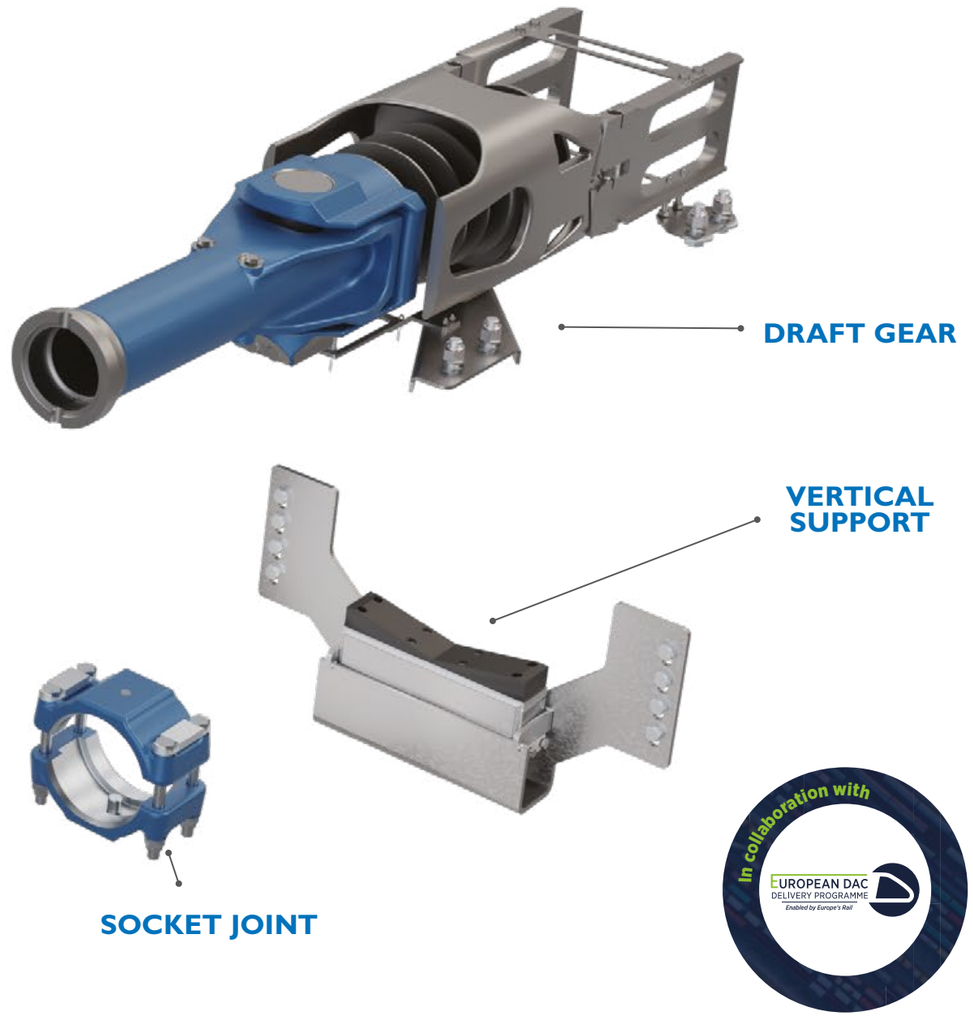

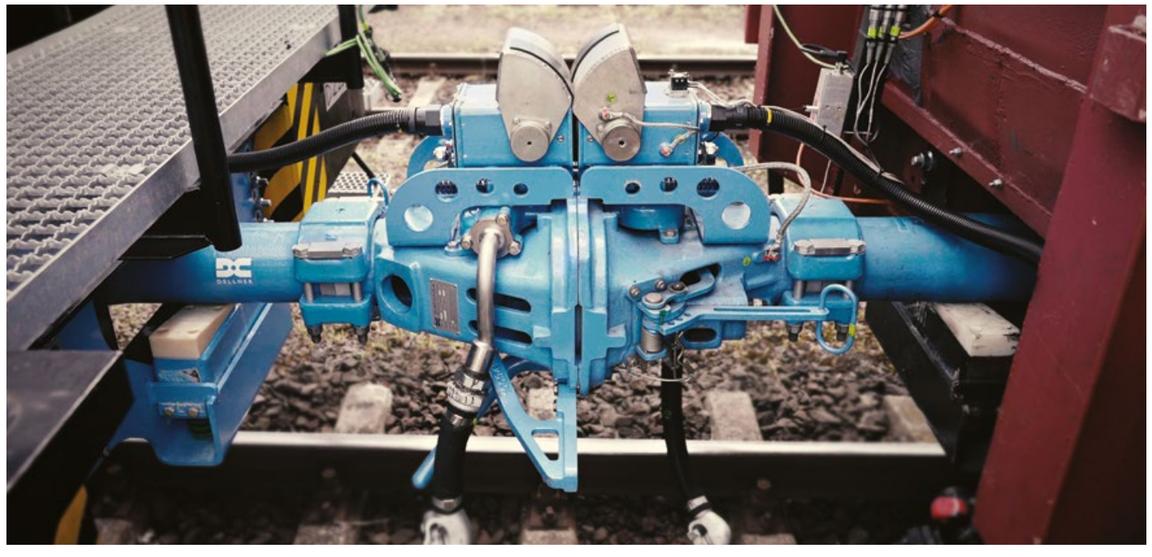

Features of the add-ons for customization:

- FRONT FACE PNEUMATIC VALVE FOR ADDITIONAL AIRLINE CONNECTION BETWEEN WAGONS
- REMOTE UNCOUPLING CAPABILITY
- CONFIGURABLE ELECTRIC COUPLERS

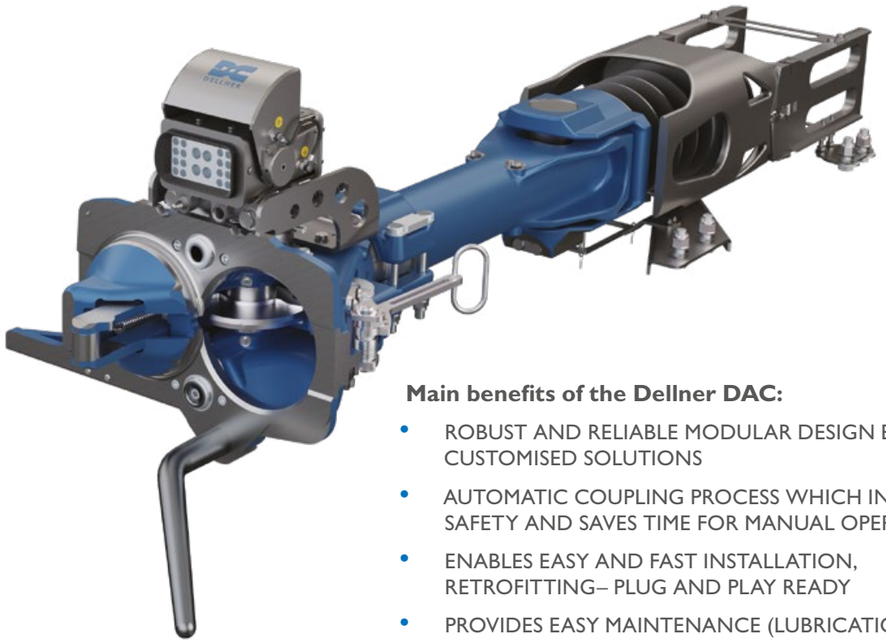

Main benefits of the Dellner DAC:

- ROBUST AND RELIABLE MODULAR DESIGN ENABLING CUSTOMISED SOLUTIONS
- AUTOMATIC COUPLING PROCESS WHICH INCREASES SAFETY AND SAVES TIME FOR MANUAL OPERATIONS
- ENABLES EASY AND FAST INSTALLATION, RETROFITTING– PLUG AND PLAY READY
- PROVIDES EASY MAINTENANCE (LUBRICATION FREE DRAFT GEAR AND GREASING COUPLER HEAD WITHOUT UNCOUPLING)
- SECURE LOW LCC (OPERATIONAL, PERSONNEL, AND MAINTENANCE)

HYBRID COUPLERS

During the changeover from screw couplers to the new Digital Automatic Couplers (DAC), operators will face the challenge of transitioning between technologies. To support this, Dellner has developed hybrid couplers for locomotives that enable easy switching between DAC coupler and Screw coupler. This helps the operator to equip the locomotive with a coupler that meets the needs of the specific train configuration. The hybrid couplers will provide all of the features and advantages of the DAC coupler when in DAC coupler mode.

The Hybrid DAC is built on a modular concept which simplifies customised integration with locomotives were necessary while also being cost efficient.

Main benefits of the hybrid couplers:

- FULLY COMPATIBLE WITH SCREW COUPLER INTERFACES
- FULLY COMPATIBLE WITH DAC INTERFACES
- SIMPLIFYING CONNECTING THE OLD AND NEW FLEETS
- MANUAL OR AUTOMATIC LIFTING DEVICE
- DESIGNED TO FIT EXISTING LOCOMOTIVE INTERFACES

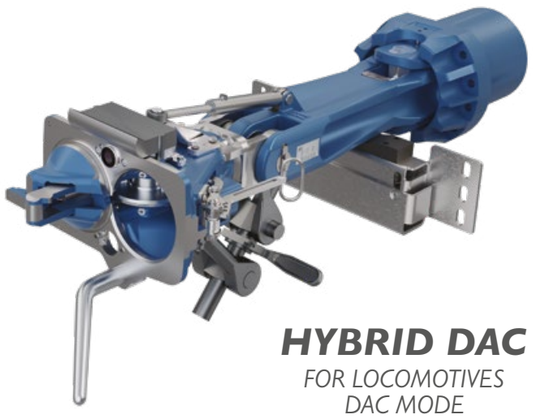

HYBRID DAC

FOR LOCOMOTIVES
DAC MODE

HYBRID DAC

FOR LOCOMOTIVES
SCREW COUPLER MODE

SERVICES

- OVERHAULS
- SPARE PARTS
- UPGRADES & MODERNISATIONS
- REPAIRS
- TECHNICAL SUPPORT & TRAINING
- MOBILE SERVICE CONTAINER
- DELLNER SERVICE CENTERS
- UTILISATION OF DIGITAL TECHNOLOGIES

"I travel to our customers whenever they need field service support.
I treat every case individually and fix the issue in the shortest possible time.
I'm happy to be part of maintaining the quality of products
which are so crucial to the functioning and reliability of the whole train."
Arkadiusz Bialas Service Technician DELLNER POLAND

SERVICES

OVERHAULS

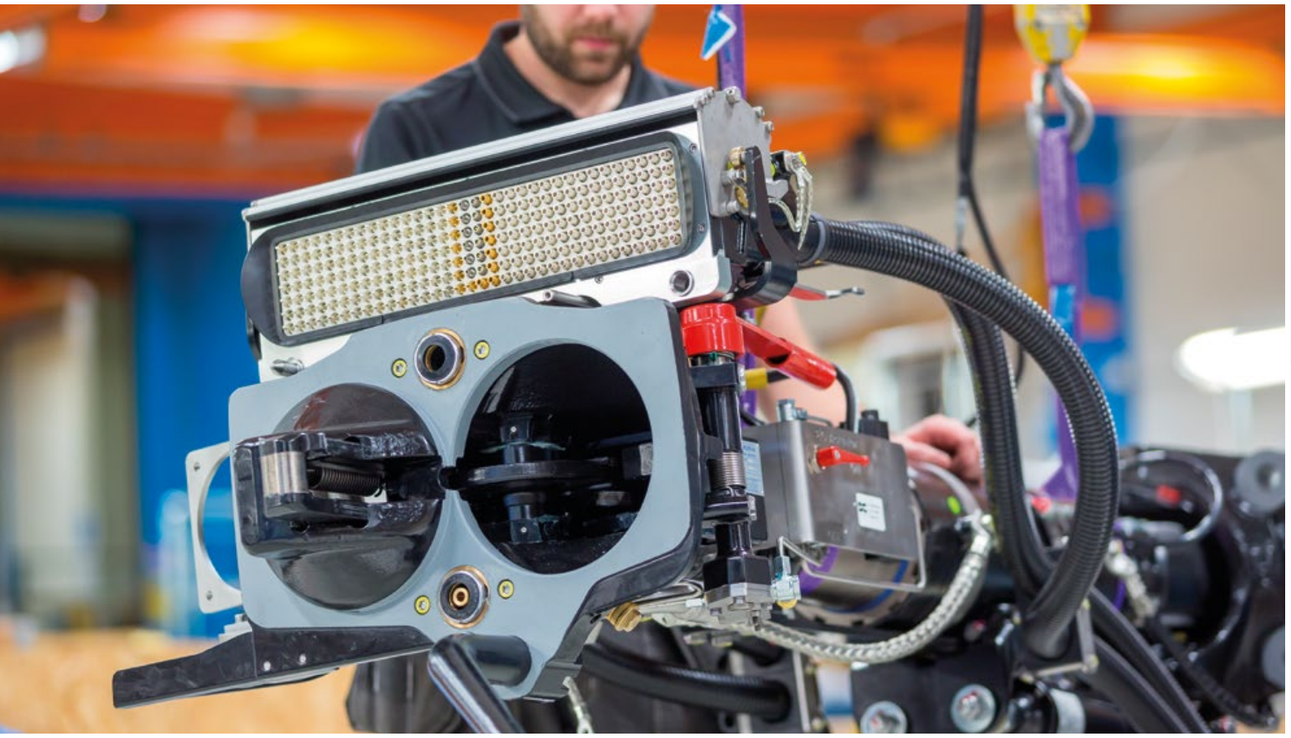

To ensure the quality and integrity of our products throughout their life cycles, we recommend regular and comprehensive overhauls (every eight years for couplers, and every ten years for gangways).

During an overhaul, we carry out stringent checks on critical components, including repairs or replacements for worn or damaged components. Every critical component is taken apart, carefully repaired, and reassembled ready for service.

No matter the issue, we take each job on a case-by-case basis, ensuring we always maintain the highest standards, either on-site or at one of our subsidiaries.

Benefits to you:

- REGULAR OVERHAULS AND COMPREHENSIVE REPAIRS
- MINIMAL ROLLING-STOCK DOWNTIME
- LOCALLY SERVICED TO THE HIGHEST STANDARDS

SPARE PARTS

When unexpected repairs and replacements are needed, we understand that time is money, and downtime should be kept to a minimum. That's why we keep a large number of spare parts for all types of product (both OEM and non-OEM) at each of our locations worldwide.

Benefits to you:

- HIGH AVAILABILITY AND RELIABILITY
- FAST SUPPORT ANYWHERE IN THE WORLD
- QUALITY SPARE PARTS HELD LOCALLY
- SPARE PARTS AVAILABLE FOR ALL TYPES OF PRODUCT (BOTH OEM AND NON-OEM)

UPGRADES AND MODERNISATIONS

We understand the need to modernise fleets to keep up with changing demands, and reduce the high costs involved with fleet replacements. That's why we offer upgrades to existing products, including function and technology upgrades which help modernise older rolling stock and keep trains safely in service for longer.

We provide:

- COMPETITIVELY-PRICED NEW PRODUCT FUNCTIONS
- LOWER MAINTENANCE COSTS
- LIFETIME PRODUCT FUNCTIONALITY
- SAFETY AND AVAILABILITY IMPROVEMENTS

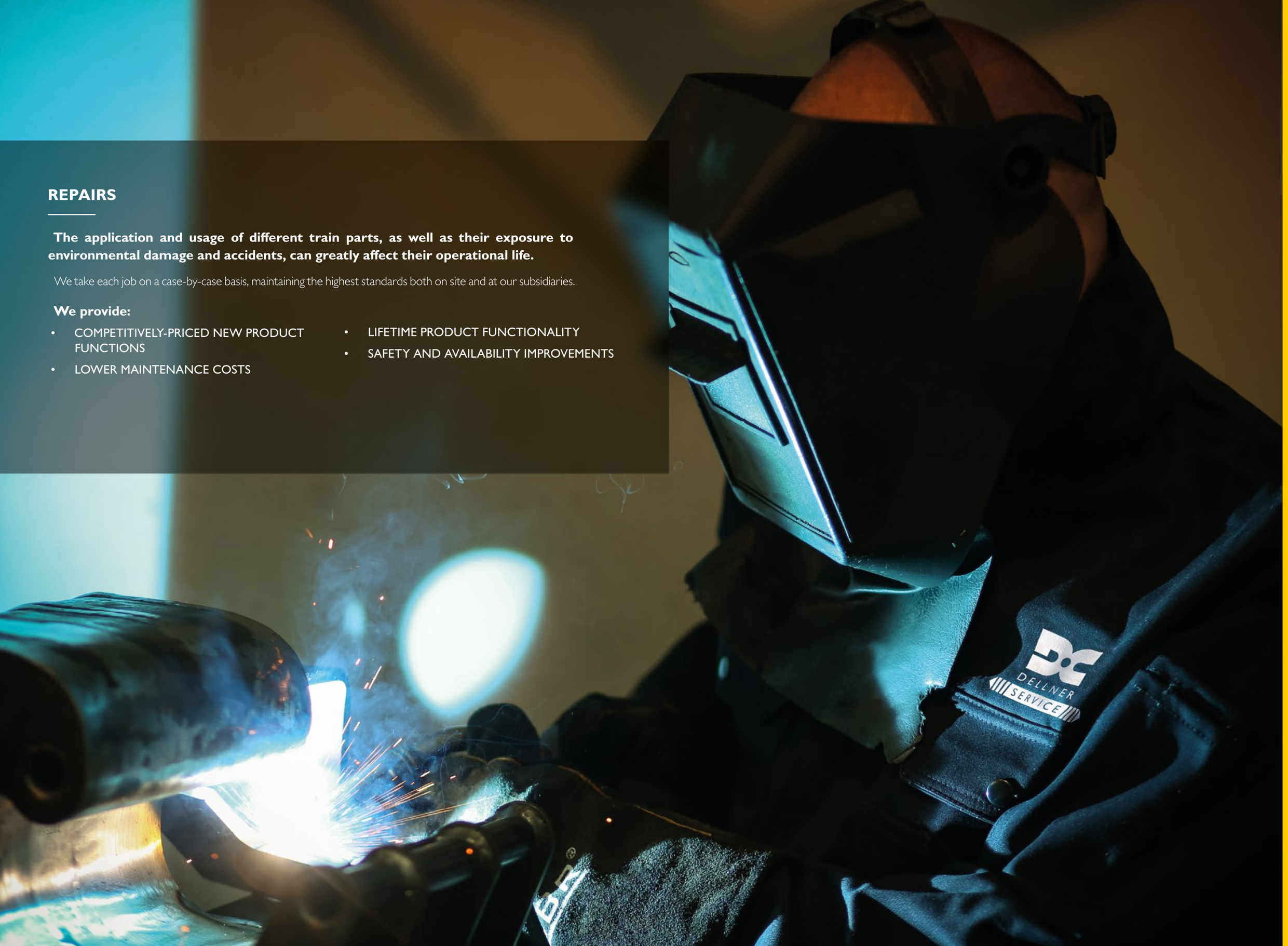

REPAIRS

The application and usage of different train parts, as well as their exposure to environmental damage and accidents, can greatly affect their operational life.

We take each job on a case-by-case basis, maintaining the highest standards both on site and at our subsidiaries.

We provide:

- COMPETITIVELY-PRICED NEW PRODUCT FUNCTIONS
- LOWER MAINTENANCE COSTS
- LIFETIME PRODUCT FUNCTIONALITY
- SAFETY AND AVAILABILITY IMPROVEMENTS

TECHNICAL SUPPORT AND TRAINING

The right training and support means products can be better maintained, which greatly reduces the risk of downtime. That's why our experienced local staff are ready to support you with technical advice and training programs for your employees, tailored to your needs.

Benefits to you:

- LOCAL TECHNICAL ADVICE AND TRAINING
- EXPERIENCED SERVICE STAFF AND ENGINEERS
- COMPREHENSIVE PRODUCT MAINTENANCE KNOWLEDGE
- 24/7/365 SERVICE STAFF AVAILABILITY

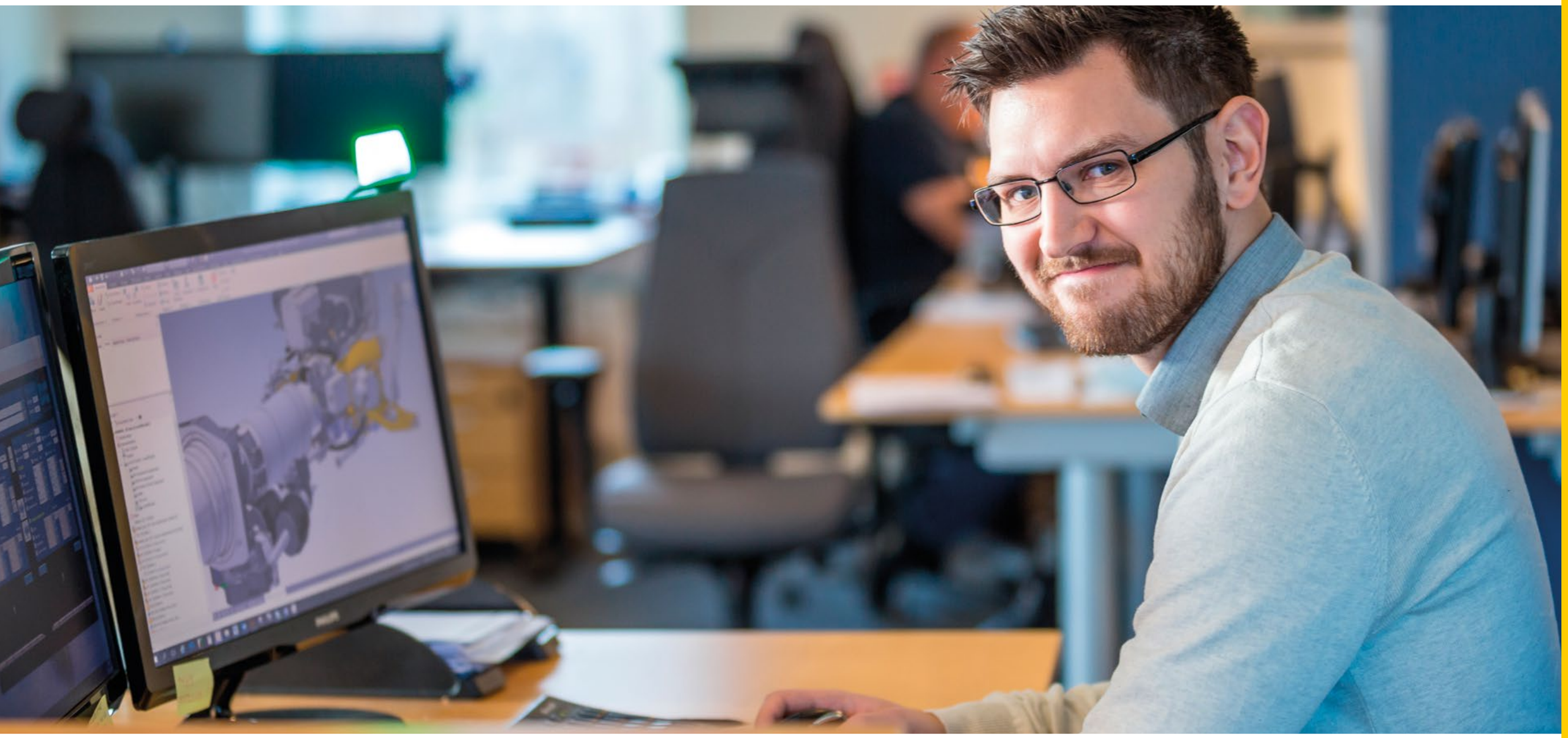

SERVICES / TECHNICAL SUPPORT AND TRAINING

MOBILE SERVICE CONTAINER

High rolling stock availability is one of your most important requirements. That's why we offer Mobile Service Container – a combined mobile workshop and warehouse for both complete overhauls and general coupler repair work, all at your own location.

Our mobile workshop enables us to carry out works on-site for a quick turnaround, so your rolling stock can be back in service with minimum disruption.

On-site service also means customers save on unnecessary logistical and operational costs.

Mobile Service Container is based on a standard shipping truck which makes it highly mobile and available anywhere in the world.

The workshop is equipped with all the tools and equipment necessary for a complete overhaul, as well as most general and specific repair work.

Together with our mobile workshop, we also offer a mobile warehouse which contains all necessary spare parts for a quick overhaul or repair and is individually equipped for each job.

DELLNER SERVICE CENTERS

Our fully equipped workshops in Sweden, Poland, the UK, France, Italy, Germany, China, Australia, India, Malaysia, Brazil, and the US offer customers the highest quality services to ensure expectations are always met.

Our Service Centers carry out modernisations, renovations, overhauls, and upgrades on existing couplers and gangways.

We produce the majority of the components we use in our products in-house, which makes us highly flexible and able to meet short lead-times. And thanks to fast delivery and high part availability, our Service Centers guarantee shorter rolling-stock downtime for our customers.

Our competitive prices and close customer cooperation ensure we carry out renovations efficiently and get them right first time. What's more, our focus on quality at every stage of the manufacturing process – as well as thorough product testing – helps provide our customers with complete passenger safety assurance.

All Dellner customers benefit from:

- **High-availability service center** – open seven days a week, all year round
- **Modern facilities** – focused on flexibility and turnaround speed
- **Experienced teams** – who focus on customers' needs
- **Competence center** – for both OEM and non-OEM products

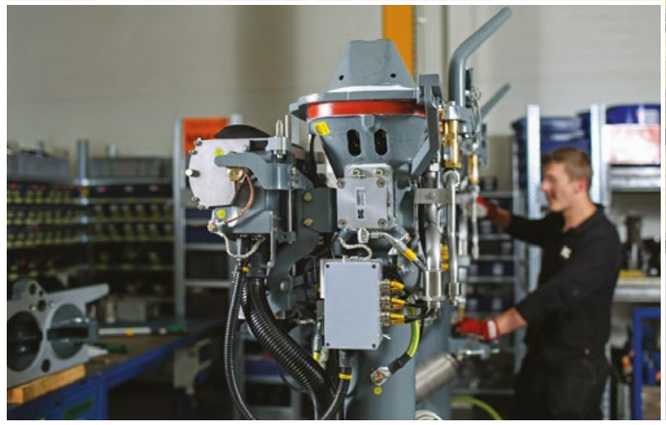

SERVICES / DELLNER SERVICE CENTERS

UTILISATION OF DIGITAL TECHNOLOGIES

Dellner applies new technologies to our products and services in a highly deliberate manner, selecting those that maximise the value to customers.

Remote Diagnostics with Dellner ConneXion & Monitoring (DXM)

Dellner's Train Connection Systems are critical safety components on trains. Through Remote Diagnostics the safety and reliability can be continuously measured, while the life cycle costs can be improved through Condition Based Maintenance. Dellner decided to develop a platform-independent solution with DXM (Digital ConneXion & Monitoring) which can be integrated into an existing condition monitoring system used in the fleet. Operational data and signals linked to Dellner coupler can be accessed remotely. Immediate actions can be taken in close co-operation between our engineers and the operator. Services can be customised to the actual usage of the coupler. DXM services can be offered for new projects, where coupler operational data can be made available through the train or retrofitted using a DXM connection box for data transmission directly to the cloud.

SERVICES / UTILISATION OF DIGITAL TECHNOLOGIES

REFERENCE PROJECTS

NEW SALES

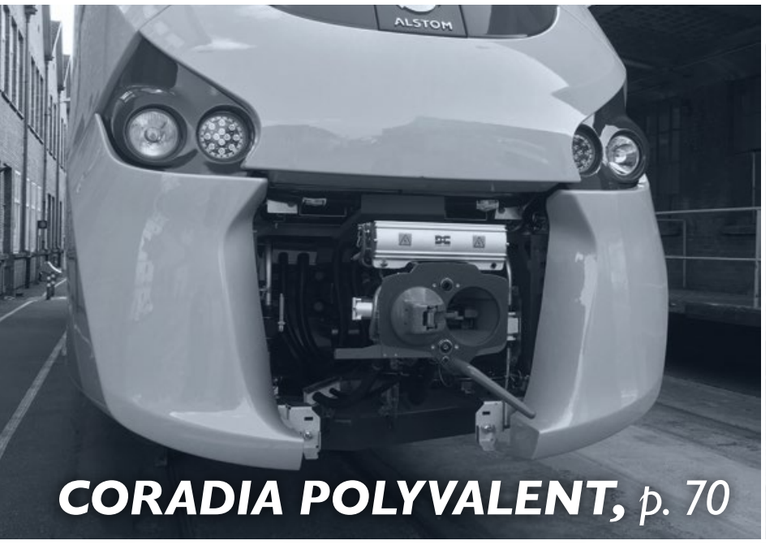

CORADIA POLYVALENT, *p. 70*

IEP, *p. 66*

C30, *p. 72*

SOUND TRANSIT 2, *p. 79*

RIYADH, *p. 78*

AVENTRA PLATFORM, *p. 68*

IEP

COMMUTERS

Producer: **Hitachi**
Operator: **First Great Western and East Coast, UK**

The Intercity Express Programme (IEP) is an important step change in train travel in the UK. IEP provides an efficient means for passengers to travel on electrified and non-electrified routes, and enhances the customer experience with more modern trains, better interiors and seating arrangements, and of course, faster journey times. Hitachi Rail Europe is the supplier of new electric and bi-mode trains for both the Great Western Main Line and the East Coast Main Line.

Dellner supported Hitachi by supplying products for 122 train sets, equivalent to 1,488 gangways, 244 automatic and 1,488 semi-permanent couplers, and 244 adapter sets.

Dellner provided technical assistance to Hitachi for VAB (Vehicle Acceptance Body) approved supplied components.

MAIN FEATURES:

Automatic coupler

- MECHANICAL COUPLER: TSI-COMPLIANT TYPE 10
- CENTRE SECTION: GAS-HYDRAULIC DAMPER
- PIVOT ANCHOR: DEFORMATION UNIT FOR CRASH ABSORPTION
- TOTAL ENERGY ABSORPTION FOR THE COUPLER: 1.6 MJ
- SIGNIFICANT CONTRIBUTION TO THE TOTAL TRAIN CRASH MANAGEMENT SYSTEM WITH DAMPERS, DEFORMATION UNITS AND SHEAR-OFF FUNCTION
- TOP-MOUNTED ELECTRICAL COUPLER INCLUDING 100 Mb ETHERNET CONNECTION
- PNEUMATIC CONNECTIONS FOR MAIN AIR AND BRAKE AIR

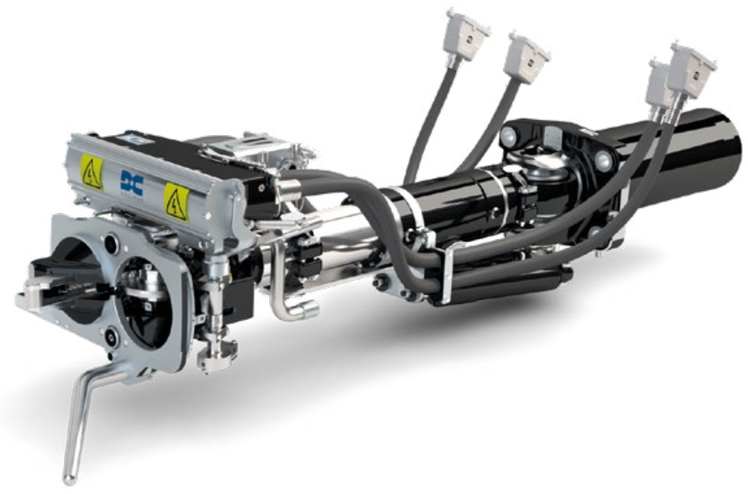

Semi-permanent coupler

- MECHANICAL COUPLER: MANUAL SOCKET JOINTS
- CENTRE SECTION: STIFF TUBE
- PIVOT ANCHOR: DEFORMATION TUBE
- TOTAL CAPACITY OF 2 MJ/CONNECTION
- SIGNIFICANT CONTRIBUTION TO THE TOTAL TRAIN CRASH MANAGEMENT SYSTEM WITH DEFORMATION UNITS AND SHEAR-OFF FUNCTION
- GANGWAY SUPPORT

Gangway

- 2-PIECE, DOUBLE-SKIN GANGWAY FOR OPTIMISED PERFORMANCE
- CUSTOM-MADE GANGWAY TO COPE WITH VERY LARGE MOVEMENTS
- COMPLIANCE WITH THE VS6853:1999 CATEGORY 1B AND TS EN 45545-2 FIRE & SMOKE REQUIREMENTS
- NOISE ATTENUATION LEVEL GREATER THAN 37 dB
- EXCELLENT AESTHETICS BOTH INSIDE AND OUT
- ABLE TO SPAN LARGER INTER-VEHICLE DISTANCES
- SMALL INSTALLATION FOOTPRINT TO VEHICLE END
- PROVIDES DESIGN LATITUDE BETWEEN COUPLER HEIGHT AND FLOOR LEVEL
- HIGH STABILITY AGAINST PRESSURE PULSE

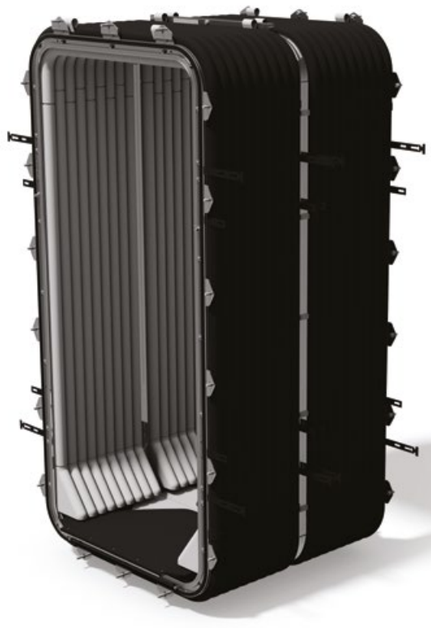

AVENTRA PLATFORM

COMMUTERS

Producer: **Bombardier**
Operator: **South Western Railway**

Dellner has received an order for 1500 couplers from Bombardier Transportation. The couplers will be fitted to 90 AVENTRA trains (750 carriages) which Bombardier supplies to FirstGroup and MTR, for operation on the South Western Railway franchise in the United Kingdom.

This is the largest ever single global contract for AVENTRA trains, and Dellner now has orders for a total of 406 trainsets for the AVENTRA platform.

Dellner will supply its UK-standard type 12 coupler head, a compact shear-out design for the front automatic coupler, and deformation tubes for high-energy crash absorption and management performance throughout the train set.

MAIN FEATURES:

Automatic coupler

- MECHANICAL COUPLER: TYPE 12
- BOTTOM-MOUNTED ELECTRICAL COUPLER
- GAS-HYDRAULIC DAMPER
- SHEAR-OUT DEVICE WITH COMPACT DESIGN

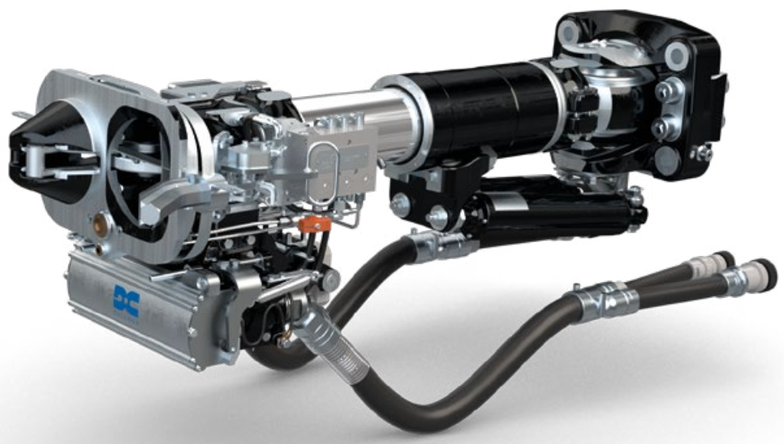

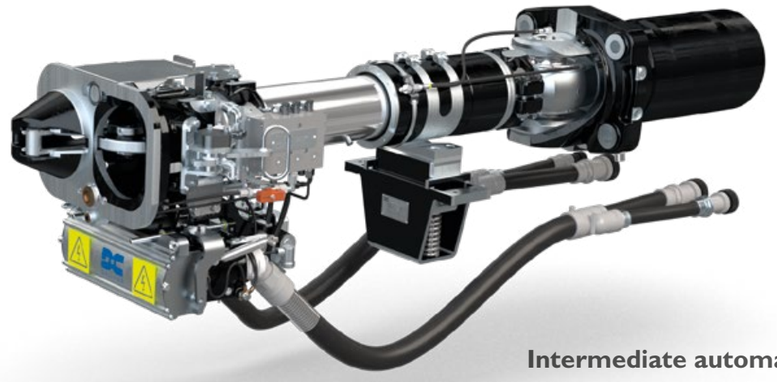

Intermediate automatic coupler

- MECHANICAL COUPLER: TYPE 12
- GANGWAY SUPPORT PLATE
- CAMERA INTERFACE FOR DRIVER COUPLING SEQUENCE OVERVIEW
- BOTTOM-MOUNTED ELECTRICAL COUPLER
- GAS-HYDRAULIC DAMPER
- REAR-MOUNTED DEFORMATION TUBE

Semi-permanent coupler

- PATENTED SOCKET JOINT CONNECTION
- DEFORMATION TUBE

CORADIA POLYVALENT

COMMUTERS

Producer: **Alstom**
Operator: **SNTF**

Alstom uses Dellner automatic couplers with spherical rubbers and semi-permanent couplers with EFG3 for its PP project in Algeria. The project involved building 17 train sets for national rail operator SNTF (Société Nationale des Transports Ferroviaires).

The trains are based on the Coradia Polyvalent design used by French operator SNCF and adapted to operating conditions in Algeria. The Algerian Coradia Polyvalent features electro-diesel operation (25 kV) and can achieve speeds up to 160 km/h.

With a total length of 110 metres, the train consists of six carriages, with capacity for 265 passengers, and will be used for long-distance services from Algiers to Oran, Béchar, Constantine, and Annaba.

MAIN FEATURES:

Automatic coupler

- MECHANICAL COUPLER: TYPE 10
- TOP MOUNTED ELECTRICAL COUPLER (2 X 84)
- GAS-HYDRAULIC DAMPER (100 mm STROKE)
- VERTICAL SUPPORT AND CENTRING
- SPHERICAL RUBBER BEARING PIVOT ANCHOR
- BP, MRP, UC VALVES
- COUPLER CENTRAL UNIT
- ADDITIONAL SAND PROTECTION FOR GAS-HYDRAULIC BUFFER
- ADDITIONAL AIR CONNECTIONS FOR RESCUE OPERATIONS
- CABLE SUPPORT
- REMOTE AND MANUAL UNCOUPLING

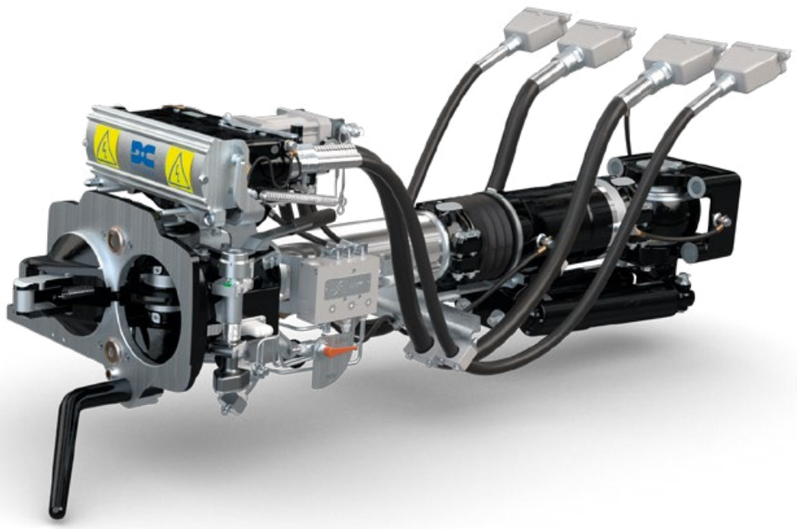

Semi-permanent coupler

- PIVOT ANCHOR: EFG3
- DEFORMATION UNIT IN CENTRE SECTION. SPLIT OF THE INTERFACE BETWEEN DEFORMATION UNIT AND PIVOT ANCHOR
- AIR CONNECTION ATTACHED TO CORE TUBE OF THE DEFORMATION UNIT

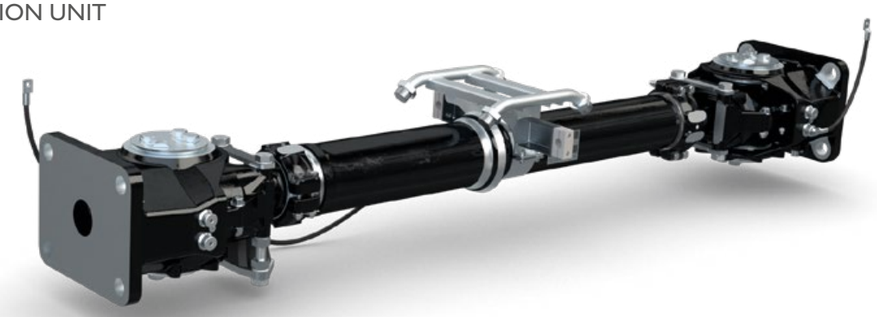

C30 STOCKHOLM

METRO

Producer: **Bombardier Transportation**
Operator: **SL (Stockholms Lokaltrafik), Sweden**

Bombardier customised the new high-technology MOVIA C30 Metros to meet the specific requirements of Stockholm's lines for accessibility, reliability and passenger comfort. Dellner's high-quality couplers and gangways are crucial to Bombardier in fullfiling these needs.

A heavy focus is placed on integrating the gangways into the vehicles by following the interior design and external profile. It also provides a good aesthetic impression for travelling passengers.

Finally, specially designed adaptations of the coupler interfaces were made in order to support the mounting process of the couplers on the vehicles.

MAIN FEATURES:

Automatic coupler

- MECHANICAL COUPLERS: TYPE 330
- CENTRE SECTION: DEFORMATION TUBE
- PIVOT ANCHOR: EFG3
- BOTTOM-MOUNTED ELECTRICAL COUPLER
- HIGH-SPEED DATA TRANSMISSION
- MECHANICAL COUPLER COMPATIBLE WITH DELLNER COUPLERS ON EXISTING C20 SERIES TRAINS
- MODULAR DESIGN

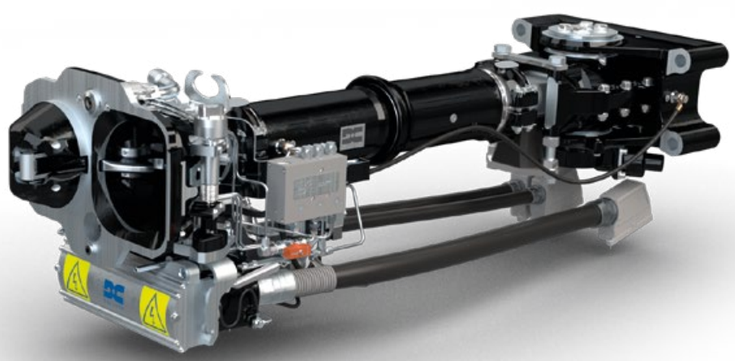

Semi-permanent coupler

- CENTRE SECTION: DEFORMATION TUBE
- PIVOT ANCHOR: EFG2
- GANGWAY SUPPORT
- MODULAR DESIGN

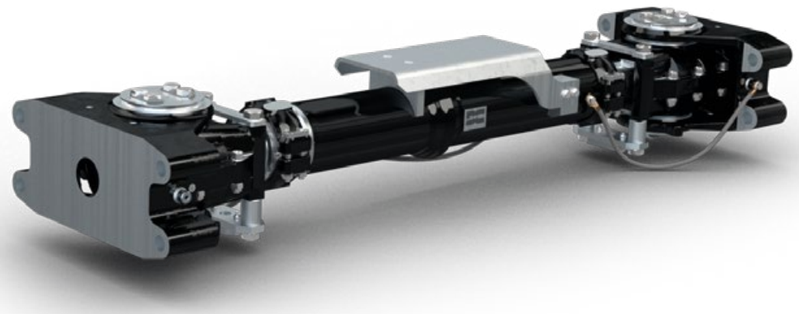

Gangway

- GANGWAY WITH COUPLER SUPPORT
- SILICONE RUBBER TWIN-WALLED BELLOWS WITH COMBINED LOWER SKIRT
- ALUMINIUM VEHICLE MOUNTING FRAMES WITH BOLTED CONNECTION
- ALUMINIUM CENTRE FRAME RESTING ON THE COUPLER SUPPORT PLATE WITH POLYMERIC BEARING MATERIAL INTERFACE SURFACE ON THE BOTTOM OF THE CENTRE FRAME
- FIXED STAINLESS STEEL TREAD PLATES MOUNTED TO VEHICLES AND OVERLAPPING FLEXIBLE TREAD PLATES ATTACHED TO THE CENTRE FRAME

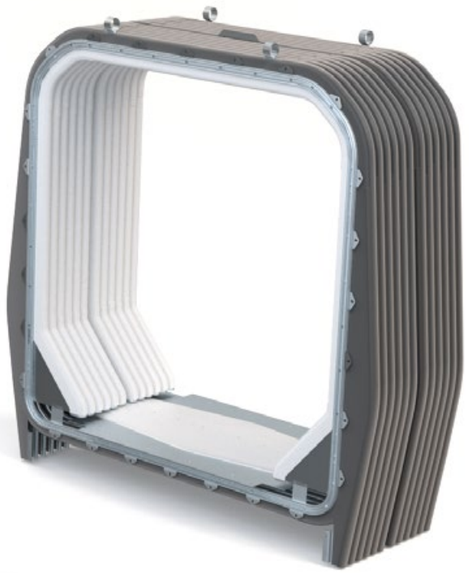

KLANG VALLEY

METRO

Producer: **Rotem**
Operator: **MRTCorp.**

The Klang Valley MRT2 metro system is a major infrastructure project designed to develop the urban transit system in the Greater Klang Valley area of Malaysia.

Malaysian law requires that trains and critical sub-system assemblies must be built using a local workforce and components. That's why Dellner has worked with Hyundai-Rotem to build its couplers at a new facility at Selangor.

This is our first facility in Malaysia and gives us an increased presence in the region to provide customers with a higher level of service and product support.

MAIN FEATURES:

Automatic coupler

- MECHANICAL COUPLER: TYPE 35 WITH REMOTE UNCOUPLING, AND COACH-SIDE EMERGENCY UNCOUPLING FOR EASY ACCESS
- MRP, BP, AND UC VALVES
- SMALL, TOP-MOUNTED ELECTRICAL COUPLER
- DOUBLE-ACTING GAS HYDRAULIC DAMPER
- PNEUMATIC CENTRING
- PIVOT ANCHOR: EFG3

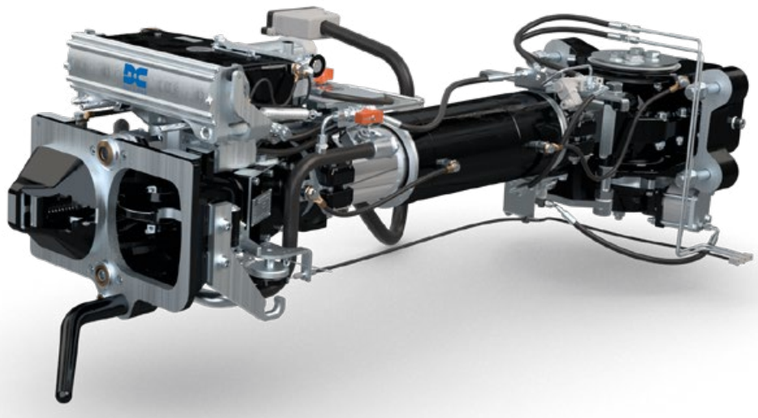

Semi-permanent coupler

- MECHANICAL COUPLER: SOCKET JOINT TYPE
- GANGWAY SUPPORT
- PNEUMATIC CONNECTION FOR MAIN AND BRAKE AIR
- GAS-HYDRAULIC DAMPER
- PIVOT ANCHOR WITH ELASTOMER ELEMENTS FOR BUFF AND DRAFT ABSORPTION

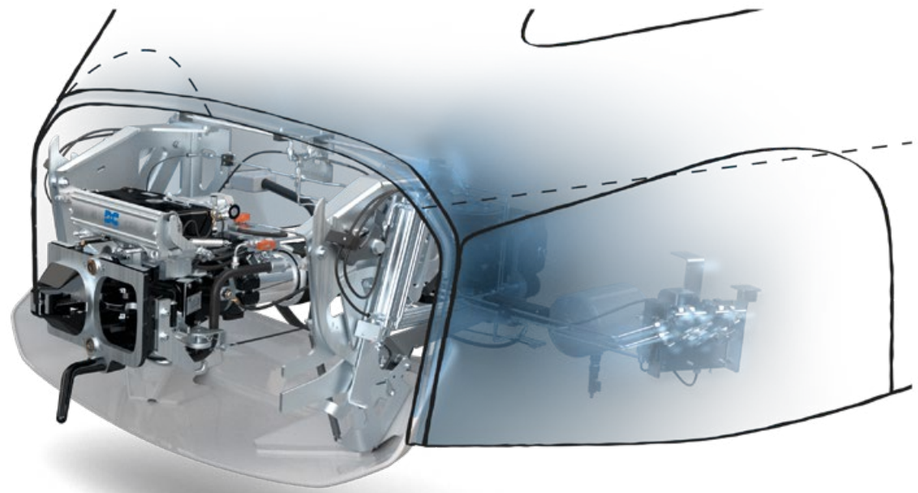

Front hatch

- AUTOMATIC OPENING SEQUENCE
- PNEUMATICALLY ACTUATED
- INDEPENDENT EMERGENCY MODE ACTIVATION IN THE EVENT OF COMPRESSED AIR LOSS

REGIO 160 PLATFORM

COMMUTER

Producer: **PESA**
Operator: **ČD (České dráhy)**

Dellner has equipped PESA Bydgoszcz S.A.'s new DMU REGIO160 platform fleet operated by České dráhy, a.s. with a complete range of Dellner Train Connection Systems: front couplers, gangways, articulation joints, adapters and side-buffers.

Czech Railways will be operating an initial run of 33 two-car regional low-floor DMU railcars (with a possible option of up to 160 railcars).

With these new and modern railcars featuring Dellner's full range of Train Connection Systems, passengers will benefit from a pleasant and safe travelling experience. We expect that this will encourage more use of public rail transport for various destinations between the regions of Vysočin -Jihočeský, Pardubický-Středočeský, including the capital Prague.

Front automatic coupler

- MECHANICAL COUPLER: TYPE 10
- TOP MOUNTED ELECTRICAL COUPLER (2 X 84)
- CENTRE SECTION: STIFF TUBE
- PIVOT ANCHOR: EFG3
- MRP, BP, AND UC VALVES

Articulation joint without energy absorption

- TENSILE YIELD STRENGTH: 1000 ± 5% KN
- COMPRESSIVE YIELD STRENGTH: 1500 ± 5% KN

Gangway

- SINGLE SKINNED SANGWAY
- HIGH LEVEL RESISTANCE TO ENVIRONMENTAL FACTORS, INCLUDING EXCELLENT NATURAL WEATHERING RESISTANCE
- NOISE ATTENUATION: MIN. 27 DB
- HEAT CONDUCTION: < 5W/M2K
- COMPLIANCE WITH THE EN 45545-2 FIRE & SMOKE REQUIREMENTS

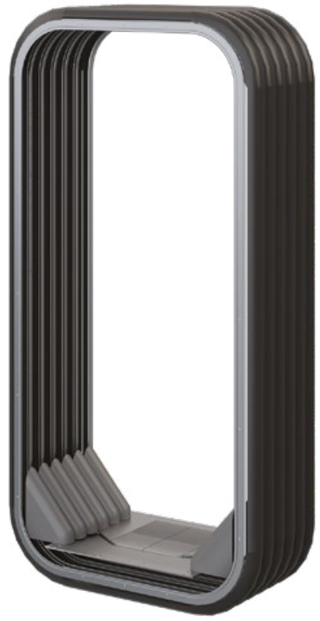

Side buffer

- COMPLIANT WITH EN 15227, (THE CRASHWORTHINESS REQUIREMENTS FOR RAILWAY VEHICLE BODIES)
- COMPLIANT WITH EN 45545 (FIRE & SMOKE REQUIREMENTS)
- ANTICLIMBING FUNCTION

Adapter

- ADAPTER TYPE 10 TO UIC HOOK
- THE LATCH ADAPTER IS PROVIDED WITH AIR CONNECTIONS FOR COUPLING BP (BRAKE PIPE) AIR FROM THE TOWING VEHICLE AND MRP (MAIN RESERVOIR PIPE) AIR.

RIYADH

METRO

Producer: **Alstom**
Operator: **Arriyadh Development Authority**

As part of the FAST consortium, Alstom has supplied 69 Riyadh-based "Metropolis" trains for lines 4, 5, and 6 of the city's metro system. They're comprised of two cars per set and are 36 metres long.

Dellner couplers supplied for the trains use deformation tubes throughout the train set to provide high-energy crash management absorption performance.

MAIN FEATURES:

Automatic coupler

- MECHANICAL COUPLER: TYPE 330
- TOP-MOUNTED ELECTRICAL COUPLER (2 X 84)
- DEFORMATION UNIT IN CENTRE SECTION
- PIVOT ANCHOR: EFG3 WITH INTEGRATED VERTICAL SUPPORT
- CENTRING DEVICE WITH MECHANICAL SPRINGS
- MRP AND UC VALVES
- COUPLER CONTROL UNIT
- REMOTE AND MANUAL UNCOUPLING

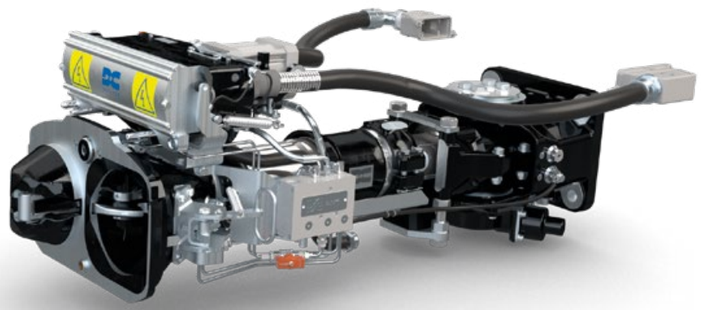

Semi-permanent coupler

- PIVOT ANCHOR: BACK-MOUNTED EFG3
- TEMPORARY VERTICAL SUPPORT
- HALF AND HALF DEFORMATION UNIT AND STIFF TUBE
- ADDITIONAL ATTACHMENTS FOR GANGWAY SUPPORT AND AIR CONNECTIONS
- PATENTED SOCKET JOINT CONNECTION

SOUND TRANSIT 2

LRV

Producer: **Siemens**
Operator: **Sound Transit**

Dellner has provided couplers for new S70 light rail vehicles (LRVs) for Sound Transit, the regional transit system serving the Seattle and Central Puget Sound area in Washington, US.

It's part of a package of 448 automatic couplers for three projects in Seattle, San Diego, and Minneapolis, to be delivered by 2023.

This deal is based on our reputation for quality, which has seen us supply multiple generations of couplers in these growing markets.

MAIN FEATURES:

Automatic coupler

- MECHANICAL COUPLER: TYPE 330
- SIDE-MOUNTED ELECTRICAL COUPLERS
- ELECTRICAL COUPLER OPERATION
- FOLDABLE
- DOUBLE ACTING DAMPER

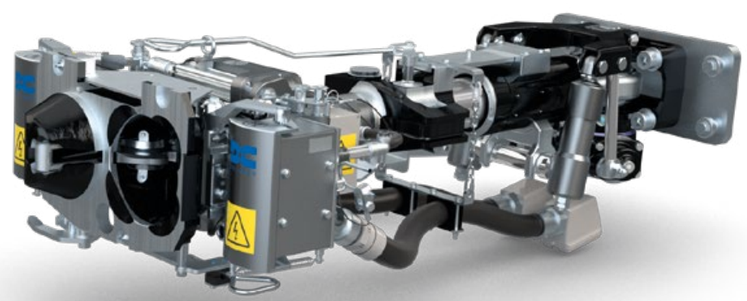

REFERENCE PROJECTS

DELLNER SERVICE

LONG–TERM SERVICE AGREEMENT, *p. 86*

COUPLER UPGRADE AND MODERNISATION, *p. 84*

NEW DELHI METRO, GANGWAY REFURBISHMENT

Customer:	**Delhi Metro Rail Corporation**
Location:	**New Delhi, India**
Product:	**Dellner Gangways**
Activity:	**420-piece gangway refurbishment**

Delhi Metro's 70 RS I trains have been in uninterrupted service since December 2002. Despite 16 years of high performance, extremely hostile conditions such as heat (up to 45ºC), dust, and humidity (more than 90% in the rainy season) were starting to have an impact on gangway integrity.

The overhaul involved replacing the old gangway rubber – including the inner and outer bellows. To keep costs low, metal components from the old gangway were reconditioned and reused.

Thanks to the overhaul, Delhi Metro has seen:

- **Cost savings** – by refurbishing the gangway and reconditioning old components
- **Enhanced performance** – without the need for new units
- **Improved aesthetics** – thanks to new rubber and reconditioned components

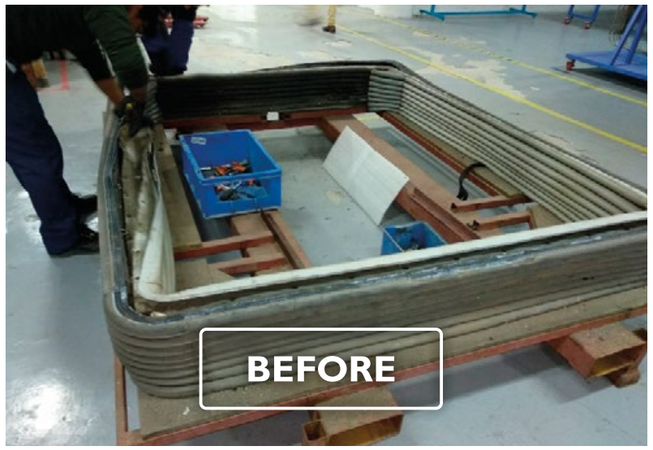

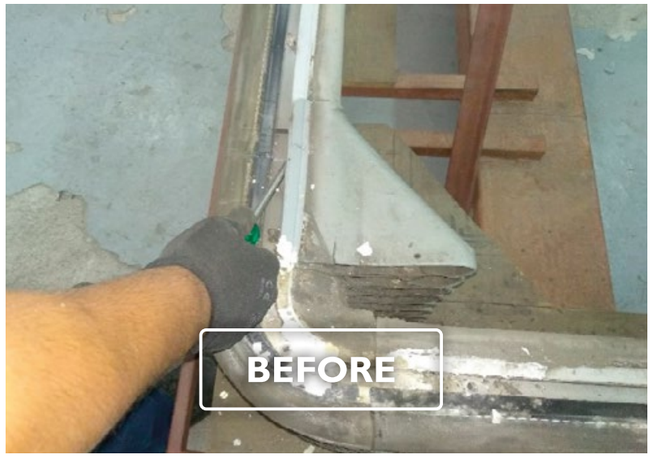

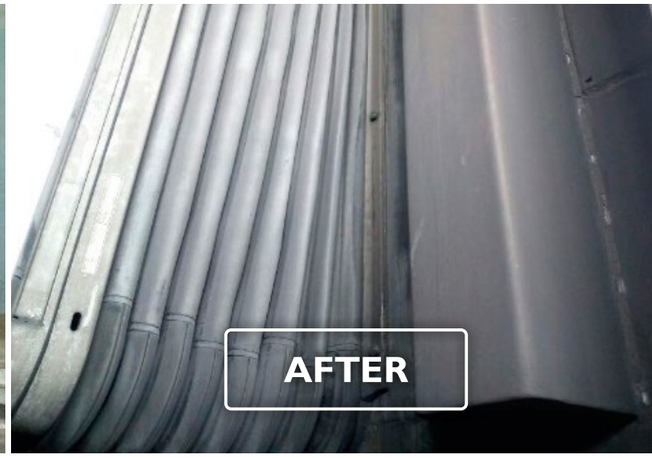

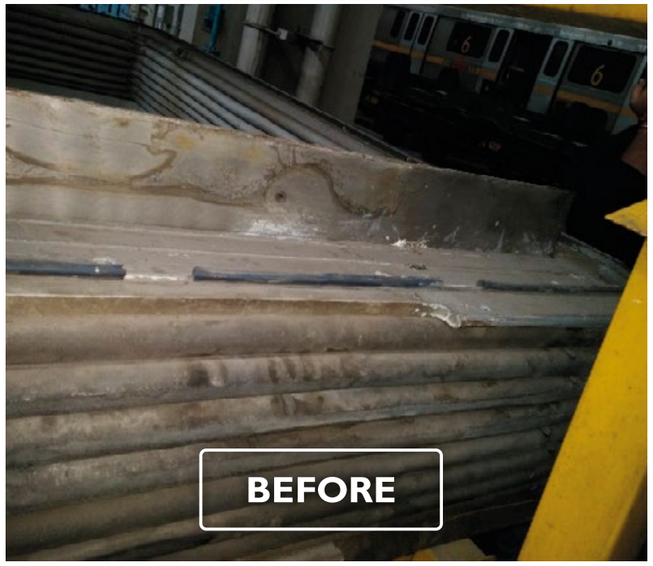

COUPLER UPGRADE AND MODERNISATION

Customer: **Different**
Location: **Poland**
Product: **Non-OEM coupler**
Activity: **667 automatic couplers and 250 semi-permanent couplers**

Since 1997, Dellner Poland has been working with the Polish National Railway (PKP) to modernise its electric multiple unit (EMU) couplers –including the EN57 and ED72 – which were more than 30 years old and under-performing.

The first modernisation program was completed in 1998, and after 10 years in operation, quality and performance tests showed minimal wear had taken place on all coupler components.

Following this, Dellner successfully applied for a Certificate of Approval from the Polish Office of Rail Transportation to modernise its automatic couplers, followed by semi-permanent couplers a few years later.

To date, Dellner Poland has modernised hundreds of couplers for various Polish operators, which has helped them to:

- **Reduce costs** – compared to the time and expense of purchasing new rolling stock, and lower maintenance costs
- **Improve on-board facilities** – such as Ethernet connectivity, CCTV, passenger information, and advertising
- **Increase flexibility** – during peak hours when speed and capacity is essential
- **Boost efficiency** – due to fewer service interruptions and better fleet utilisation

LONG–TERM SERVICE AGREEMENT

Customer: **Bombardier Transportation**
Location: **Australia**
Product: **OEM couplers and gangways**
Activity: **A 30-year maintenance agreement for 150 automatic couplers, 750 semi-permanent couplers, and 375 gangways**

As the exclusive supplier of services and spare parts for couplers and gangways on the Queensland New Generation Rolling Stock (QNGR) fleet in Brisbane, Australia, Dellner's programme involves overhauling its couplers every 10 years and its gangways every 15.

Dellner is committed to giving Bombardier:

- **Scheduled overhauls** – including maintenance and urgent support services
- **Shorter lead times** – for spares and stores management
- **Comprehensive training** – including evaluation and instruction
- **Thorough investigations** – for condition monitoring, analysis, and modification
- **Cost-saving initiatives** – shared across the partners
- **Local and prompt support services** – for its fleet and personnel

The benefits for Bombardier include:

- **More consistent standards and procedures** – for the entire life of the product
- **Reduced unit downtime** – which helps to keep down costs
- **Increased efficiency** – due to improved design and maintenance over the life of the partnership
- **One source of truth** – to keep all maintenance data safe, correct, and uninterrupted
- **Fixed costs** – for accurate maintenance planning expenditure
- **Proactive schedules** – to reduce unplanned maintenance and additional costs
- **Optimised fleet** – for a better customer experience

CORPORATE
SOCIAL RESPONSIBILITY

FOR DELLNER, SUSTAINABILITY IS A KEY SUCCESS FACTOR

We actively search for ways to incorporate sustainability everywhere our business has an impact, making decisions based around our core values: Respect, Action, Joy and Team. We take responsibility for our business decisions by considering the consequences from economic, technical, social, and ecological standpoints.

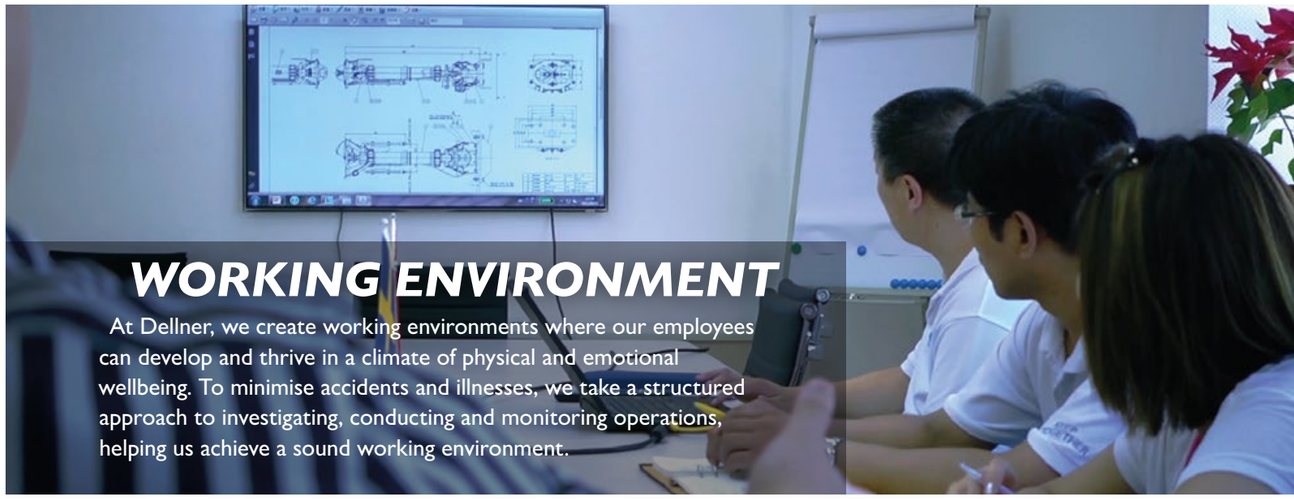

WORKING ENVIRONMENT

At Dellner, we create working environments where our employees can develop and thrive in a climate of physical and emotional wellbeing. To minimise accidents and illnesses, we take a structured approach to investigating, conducting and monitoring operations, helping us achieve a sound working environment.

SOCIAL RESPONSIBILITY

We recognise we have a social responsibility to our communities, including occupational safety, preventative healthcare, and support for social projects at our sites.

For example, we run health promotion campaigns and offer financial support to children's homes, poor households, people with severe illnesses, and many more. We also support DKMS in Germany to encourage people to register on the donor-matching database to help find 'genetic twins' for people with blood cancer.

EQUALITY

We do not discriminate between genders with regard to salary, career advancement or promotions. All employees are given equal opportunities for professional development, both within their existing fields and in new areas.

ENVIRONMENTAL RESPONSIBILITY

We continuously improve our processes to minimise our impact on the environment – optimising environmental performance, preventing pollution, and using resources more efficiently, including energy, water, packaging and other raw materials.

DIVERSITY

We take active measures to promote the equal rights and opportunities of our employees in the workplace. We believe in equality regardless of race, nationality, ethnicity or religious beliefs, as this creates better conditions for an innovative and inspiring work environment.

GREAT SUCCESS
WITH GREAT PEOPLE

Dellner has been a part of the rail business for more than 81 years. Throughout this time, we have focused on innovative research and advanced design, resulting in several significant breakthroughs for the rail industry as a whole.

We have opened 21 subsidiaries and branches around the world which are dedicated to serving our customers with new products and services. This success is based on our most valuable resource – our people.

OUR PEOPLE, YOUR BENEFIT

We have more than 1200 employees around the world and we know that people only give their best if they are comfortable in their job and feel understood. That's why Dellner focuses on mutual appreciation and dialogue beyond cultural boundaries.
Dellner's headquarters are located in Sweden and the way we run our company is based entirely on the Swedish style of management, where the employee is the most important asset and has freedom of action at work. We trust our people and they trust Dellner.
We know that only satisfied employees can be creative, innovative, and dedicated to their work, which directly influences all areas of our business – and means we can serve you better.

OPPORTUNITY = DEVELOPMENT

There are many different ways of motivating employees to work efficiently. At Dellner, we achieve this by challenging our people and giving them opportunities for further development.

Fulfilment at work is one of the best drivers in life. That is why we like to surround ourselves with contented people who are motivated to give great service, create outstanding products, and help us accomplish our business goals.

NO BOUNDARIES, ONLY STRONG CONNECTIONS

Dellner benefits from having subsidiaries around the world – and our customers do too.
Whenever we are working on special projects, we create international groups from different departments which can look at each topic from varied points of view. It helps us to investigate more ideas and to reach a solution in a shorter time. This approach also gives our people the opportunity to create bonds with coworkers from other countries, and gain a better understanding of other cultures and ways of working.

CONSTANT IMPROVEMENTS

In order to keep improving our products and services, and make breakthroughs, we need to keep learning. We invest in our people, and encourage them to think about new concepts, and challenge the knowledge they gain.
Work-related training and professional courses are an important part of our continuous improvement, and we also arrange regular knowledge-sharing meetings which strengthen our skills in areas like sales, procurement, marketing, and logistics – and prepare us for our next challenges.

THINKING OUTSIDE OF THE BOX

Dellner is an intelligent and professional organisation, with a passion for producing innovative solutions and high-quality Train Connection Systems. That's why we remain so dedicated to research and development, and to recruiting highly creative and innovative people.

CONTACTS

ARGENTINA
Dellner Couplers S.R.L
Maipú, 1300 Piso 11
Buenos Aires C1001 CABA
Phone: +55 11 9 8216 6351
arinfo@dellner.com

Workshop
Avenida Quintana s/n
Código Postal 6648 Mechita

AUSTRALIA
Dellner Couplers Australia Pty Ltd
Factory 2/8 Newry Drive
New Gisborne Victoria 3438
Phone: +61 3 542 077 32
auinfo@dellner.com

BRAZIL
Dellner do Brasil Sistemas de Conexão Ltda
G8 Business Park Galpão E
Rua Osasco 949 Cajamar
São Paulo 05075-000
Phone: +55 11 9 8216 6351
brinfo@dellner.com

CHINA
Dellner Train Connection Systems (Shanghai) Co., Ltd Wuhan Branch
No.1-2 Building in Zhonghuan Industry Park
South of Bishui Road at Jiangjun Street
(Jin Tan Street) Dongxihu District
Wuhan 430040
Phone: +86 27 8390 0961
cninfo@dellner.com

CHINA
Dellner Train Connection Systems (Shanghai) Co., Ltd. Changchun. Branch
Xi'er Industry Park, Cross of Xijing Road and Jinmai Street Lvyuan District, Changchun, Jilin Province Changchun 130113
Phone: +86 431 8132 8468
cninfo@dellner.com

CHINA
Dellner Train Connection Systems (Shanghai) Co. Ltd
1st floor, Building 3, Li'an Industrial Park,;
No. 1366, Qixin Road, Minhang District
Shanghai 201199
Phone: +86 21-6442 2182
cninfo@dellner.com

CHINA
Dellner Train Connection System (Shanghai) Co.,Ltd. Beijing Branch
NO.713, Yongchang Industry park,
3 Yongchang north road, Yizhuang District
Beijing 1000176
Phone: +86 10 67863133
cninfo@dellner.com

FRANCE
Dellner France
50 rue Jean Zay
Saint Priest 69800
Phone: +33 478 207 858
frinfo@dellner.com

GERMANY
Dellner GmbH
Industriestraße 52
76698 Ubstadt-Weiher
Phone: +49 (0) 7253 209 47 700
deinfo@dellner.com

INDIA
Dellner India Pvt Ltd
Survey No: 59/1, Padur Road
Mevalurkuppam, Spriperumbudur Taluk, Tamil Nadu
Kanchipuram Disctrict, 602105
Phone: +91 44 3012 5901
ininfo@dellner.com

INDIA
Dellner India Pvt Ltd
Spring Meadows Business Park
A-61, B/4 & 4A, Sector 63
Uttar Pradesh
Noida – 201301
Phone: +91 98 1109 4454
ininfo@dellner.com

ITALY
Dellner Italy S.R.L
Zona Industriale Pescarito
Via Pescarito 101B
San Mauro Torinese 10099
Phone: +39 011 27 38 911
itinfo@dellner.com

MALAYSIA
Dellner Malaysia Sdn Bhd
26 Jalan Kartunis U1/47 Glenmarie Temasya
40150 Shah Alam
Selangor
Phone: +603 55690524
myinfo@dellner.com

POLAND
Dellner Sp. z o.o.
Gryfa Pomorskiego 55, Str.
Miszewko 80-297
Phone: +48 58 77 22 200
plinfo@dellner.com

SINGAPORE
Dellner South East Asia
57 Mohd Sultan Road #03-05 Sultan Link
City Hall Suite
Singapore 238997
Phone: +65 6933 9556
sginfo@dellner.com

SWEDEN
Dellner Couplers AB
Vikavägen 144
Falun 79195
Phone: +46 23 - 76 54 00
info@dellner.com

TURKEY
Dellner Ltd.
Kizilirmak Mah.1450 Sk. 3/66 Cukurambar
06520 Ankara
Phone: +90 312 472 72 77
trinfo@dellner.com

UNITED KINGDOM
Dellner Limited
Hearthcote Road Swadlincote
DE11 9DX, Derbyshire
Phone: +44 1283 221122
ukinfo@dellner.com

USA
Dellner, Inc
4016 Shutterfly Road
Charlotte, NC 28217
Phone: +1 704 527 21 21
usinfo@dellner.com

USA
Dellner, Inc West Coast Service Center
8413 Washington Blvd. Suite 155
CA 95678 Roseville
Phone: +1 916 780 2600
usinfo@dellner.com